IAI
Quality and Innovation

EC-ST11
EC-ST15

ELECYLINDER®
Stopper Cylinder

Simple & Wireless Operation
2-Point Positioning Actuator

www.intelligentactuator.com

2-point positioning

Built-in controller

New compact EC stopper cylinder type!

ELECYLINDER®

Stopper Cylinder

EC-ST11/ST15(ME)

1

Compact

Body width available from **112mm**!
What's more, all models have a built-in controller.

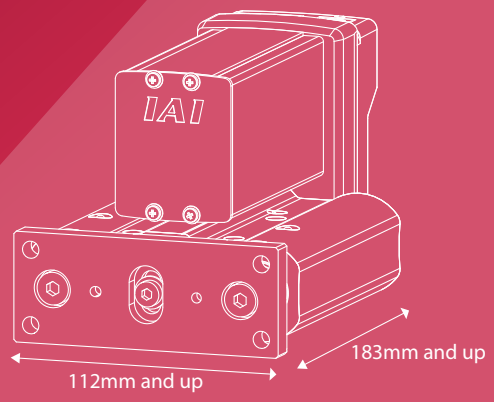

3

Usable with just a 24V power supply

Operable with electricity alone. No air source required

This product can be operated simply by preparing a 24V power supply.
Because an air source is not required, it can be used anywhere.

(supports double and single SOL)

IAI 24V power supply
PSA-24

Ideal for stopper applications!

2

Energy savings

Saves energy in logistics and transport lines!

Setting suppressing standby current values* enables further reduced power consumption.

*Setting suppressing standby current values refers to "enabling current suppression when stopped" via parameter setting. When external pressure is applied, the current value is raised to return to the "original position."

4

Rolling bushing structure

Handles impact loads in the radial direction well, ideal for stopper applications.

Model Specification Items

ELECYLINDER®

EC – [ ] [ ] ([ ]) – **50** – [ ] ([ ])

Series | Type | Lead | Specifications | Stroke | Cable Length | Options

Type

ST11	Stopper Cylinder 112mm width
ST15	Stopper Cylinder 148mm width

Lead

<ST11>

M	Lead 5mm
L	Lead 2.5mm

<ST15>

L	Lead 3mm

<ST15 ECO type>

M	Lead 6mm

Specifications

Left blank	Standard specification
E	ECO type (Note)

(Note) Only ST15 is available for the ECO type.

Stroke

50	50mm

Cable Length

0	No cable, Power • I/O connector included (Note)
(S)1	1m
~	~
(S)10	10m

(Note) Connector is not included if ACR option (RCON-EC connection specification) is selected

Options

Left blank	Incremental encoder specification, NPN specification, no option
ACR	RCON-EC connection specification
B	Brake
FS	Front spacer (Note)
G5	Designated grease specification
NM	Opposite home position specification
PN	PNP specification
TMD2	Split motor and controller power supply specification
WA	Battery-less absolute encoder specification
WL	Wireless communication specification
WL2	Wireless axis operation specification

(Note) ST11 type only supported

Precautions for Installation

● Mounting orientation

○: Can be mounted ×: Cannot be mounted

		Mounting orientation			
				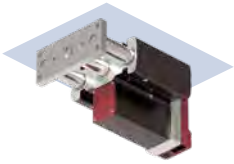	
Series	Type	Horizontal mounting on flat surface	Horizontal mounting to side	Horizontal mounting suspended	Vertical mounting
EC	ST11	×	×	×	○
	ST15	○	○	○	○
	ST15ME	×	×	×	○

● Keep the body installation surface and workpiece mounting surface flatness within 0.05mm/m.
Uneven flatness will increase the sliding resistance and may cause a malfunction.

Specification Tables

Model name	Type	Lead		Stroke (mm) and max. speed (mm/s) *Length of band = Stroke; *Numbers in band = Maximum speed by stroke	Max. payload (kg)		Reference Page
		Model	mm	50	Horizontal	Vertical	
Stopper cylinder	ST11	M-	5	350	-	1(*)	P.5
		L-	2.5	175	-	3(*)	
	ST15	L-	3	200	5(*)	3(*)	P.7
	ST15 (ECO type)	ME-	6	225	-	10(*)	P.9

(*) For operation at maximum speed and maximum acceleration/deceleration.

EC-ST11

Side-mounted Motor | Body Width 110 mm | 24v Stepper Motor

Model Specification Items

EC	-	ST11	L	-	50	-		-	
Series	-	Type	Lead	-	Stroke	-	Power • I/O cable length	-	Options
			L 2.5mm M 5mm		50 50mm		See power • I/O cable length table below		See options below

CE RoHS 10

Vertical | Horizontal | Side | Ceiling

Selection Notes

(1) The home position is set on the non-motor side for the standard specification. Please check Dimensions for the home position.
(2) Use with allowable load of 300N or less for the thrust from a conveyor, etc.
(3) When using a ϕ7.8 through hole, the motor cover must be removed.

Operation Range

Stroke (mm)	EC-ST11
50	○

Options * Please check the Options reference pages to confirm each option.

Name	Option code	Reference page
RCON-EC connection specification (Note 1)	**ACR**	11
Brake	**B**	11
Designated grease specification	**G5**	11
Front spacer	**FS**	11
Opposite home position specification (Note 2)	**NM**	11
PNP specification	**PN**	12
Split motor and controller power supply specification	**TMD2**	12
Battery-less absolute encoder specification	**WA**	12
Wireless communication specification	**WL**	12
Wireless axis operation specification	**WL2**	12

(Note 1) If the RCON-EC connection specification (ACR) is selected, the PNP specification (PN) and split motor and controller power supply specification (TMD2) cannot be selected.
(Note 2) Standard specification homes away from the motor end. Opposite specification homes at the motot end.

Power • I/O Cable Length

Standard Connector Cable

Cable code	Cable length	User wiring specification (flying leads)	RCON-EC connection specification (Note 4) (with connectors on both ends)
		CB-EC-PWBIO□□□-RB supplied	CB-REC-PWBIO□□□-RB supplied
0	Without cable	○(Note 3)	○
1 ~ 3	1 ~ 3m	○	○
4 ~ 5	4 ~ 5m	○	○
6 ~ 7	6 ~ 7m	○	○
8 ~ 10	8 ~ 10m	○	○

(Note 3) Only terminal block connector is included. Please refer to P. 18 for details.
(Note 4) If RCON-EC connection specification (ACR) is selected as an option.
(Note) Robot cable.

4-way Connector Cable

Cable code	Cable length	User wiring specification (flying leads)	RCON-EC connection specification (Note 5) (with connectors on both ends)
		CB-EC2-PWBIO□□□-RB supplied	CB-REC2-PWBIO□□□-RB supplied
S1 ~ S3	1 ~ 3m	○	○
S4 ~ S5	4 ~ 5m	○	○
S6 ~ S7	6 ~ 7m	○	○
S8 ~ S10	8 ~ 10m	○	○

(Note 5) If RCON-EC connection specification (ACR) is selected as an option.
(Note) Robot cable.

Main Specifications

Item			Description	
Lead		Ball screw lead (mm)	5	2.5
Vertical	Payload (Note 6)	Payload (kg) (energy-saving disabled)	1	3
	Speed / acceleration/ deceleration	Max. speed (mm/s)	350	175
		Min. speed (mm/s)	7	4
		Rated acceleration/deceleration (G)	0.3	0.3
		Max. acceleration/deceleration (G)	0.5	0.3
Brake		Brake specification	Non-excitation actuating solenoid brake	
		Brake holding force (kgf)	5	10
Stroke (mm)			50	

(Note 6) For operation at maximum speed and maximum acceleration/deceleration.

Item	Description
Drive system	Ball screw, ϕ8mm, rolled C10
Positioning repeatability	±0.15mm
Lost motion	- (notation not available due to 2-point positioning function)
Rod	ϕ25mm, material: aluminum, hard alumite treatment
Guide shaft	S45C
Front bracket	Material: Aluminum, white alumite treatment
Ambient operating temperature, humidity	0 ~ 40°C, 85%RH or less (no condensation)
Ingress protection	IP20
Vibration & shock resistance	4.9m/s^2
Overseas standards	CE marking, RoHS directive
Motor type	Stepper motor (□35)
Encoder type	Incremental/battery-less absolute
Number of encoder pulses	800 pulse/rev

Correlation Diagram of Workpiece Mass and Workpiece Impact Speed

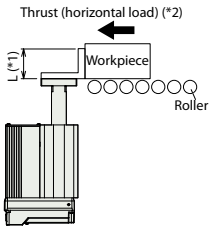

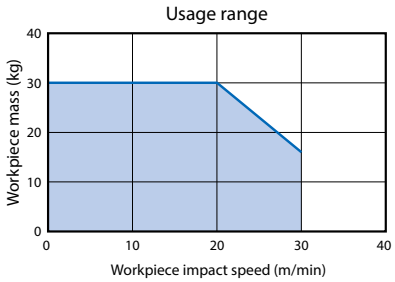

(*1) Use within L dimension of 50mm.
(*2) Use with allowable load of 300N or less for the thrust from a conveyor, etc.

Dimensions

CAD drawings can be downloaded from our website.
www.intelligentactuator.com

(Note) When the rod is returning to its home position, please be mindful of possible interference from nearby objects, as it will travel until it reaches the M.E.

ST: Stroke
M.E: Mechanical end
S.E: Stroke end

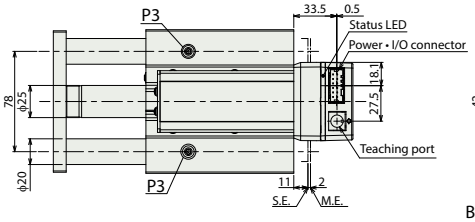

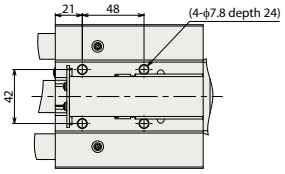

Arrow view V1
Body frame mounting hole details
*With motor cover removed

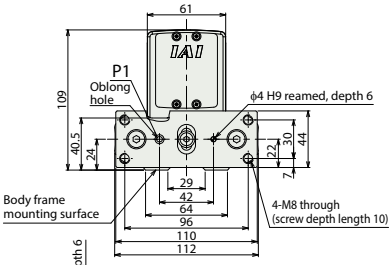

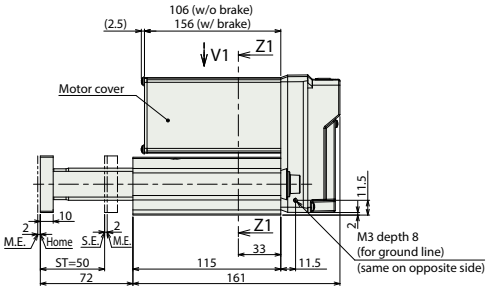

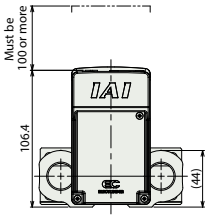

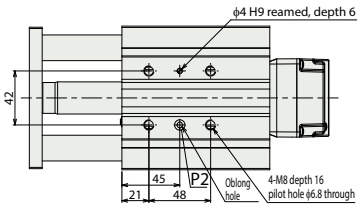

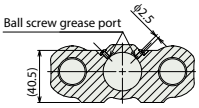

Cross section of Z1-Z1
Ball screw grease lubrication port details

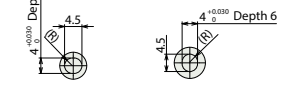

Detailed view of P1
Front bracket
oblong hole details

Detailed view of P2
Body frame
oblong hole details

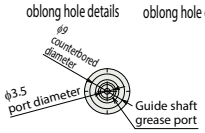

Detailed view of P3
Grease lubrication port details

Mass

Stroke		50
Mass (kg)	Without brake	2.6
	With brake	2.8

Applicable Controllers

(Note) EC Series products are equipped with a built-in controller. Please refer to P. 16 for details on built-in controllers.

EC-ST15

Side-mounted Motor | Body Width 150 mm | 24v Stepper Motor

Model Specification Items

EC	-	ST15	L	-	50	-		-	
Series	-	Type	Lead	-	Stroke	-	Power • I/O cable length	-	Options
			L 3mm		50 50mm		See power • I/O cable length table below		See options below

CE RoHS 10

Horizontal | Vertical | Side | Ceiling

Selection Notes

(1) The home position is set on the non-motor side for the standard specification. Please check Dimensions for the home position.

(2) Use with allowable load of 500N or less for the thrust from a conveyor, etc.

Operation Range

Stroke (mm)	EC-ST11
50	○

Options * Please check the Options reference pages to confirm each option.

Name	Option code	Reference page
RCON-EC connection specification (Note 1)	**ACR**	11
Brake	**B**	11
Designated grease specification	**G5**	11
Opposite home position specification (Note 2)	**NM**	11
PNP specification	**PN**	12
Split motor and controller power supply specification	**TMD2**	12
Battery-less absolute encoder specification	**WA**	12
Wireless communication specification	**WL**	12
Wireless axis operation specification	**WL2**	12

(Note 1) If the RCON-EC connection specification (ACR) is selected, the PNP specification (PN) and split motor and controller power supply specification (TMD2) cannot be selected.

(Note 2) Standard specification homes away from the motor end. Opposite specification homes at the motor end.

Power • I/O Cable Length

Standard Connector Cable

Cable code	Cable length	User wiring specification (flying leads)	RCON-EC connection specification (Note 4) (with connectors on both ends)
		CB-EC-PWBIO□□□-RB supplied	CB-REC-PWBIO□□□-RB supplied
0	Without cable	○(Note 3)	○
1 ~ 3	1 ~ 3m	○	○
4 ~ 5	4 ~ 5m	○	○
6 ~ 7	6 ~ 7m	○	○
8 ~ 10	8 ~ 10m	○	○

(Note 3) Only terminal block connector is included. Please refer to P. 18 for details.
(Note 4) If RCON-EC connection specification (ACR) is selected as an option.
(Note) Robot cable.

4-way Connector Cable

Cable code	Cable length	User wiring specification (flying leads)	RCON-EC connection specification (Note 5) (with connectors on both ends)
		CB-EC2-PWBIO□□□-RB supplied	CB-REC2-PWBIO□□□-RB supplied
S1 ~ S3	1 ~ 3m	○	○
S4 ~ S5	4 ~ 5m	○	○
S6 ~ S7	6 ~ 7m	○	○
S8 ~ S10	8 ~ 10m	○	○

(Note 5) If RCON-EC connection specification (ACR) is selected as an option.
(Note) Robot cable.

Main Specifications

Item			Description
Lead		Ball screw lead (mm)	3
Horizontal	Payload (Note 6)	Payload (kg) (energy-saving disabled)	5
Horizontal	Speed / acceleration/ deceleration	Max. speed (mm/s)	200
Horizontal	Speed / acceleration/ deceleration	Min. speed (mm/s)	4
Horizontal	Speed / acceleration/ deceleration	Rated acceleration/ deceleration (G)	0.3
Horizontal	Speed / acceleration/ deceleration	Max. acceleration/deceleration (G)	0.5
Vertical	Payload (Note 6)	Payload (kg) (energy-saving disabled)	3
Vertical	Speed / acceleration/ deceleration	Max. speed (mm/s)	200
Vertical	Speed / acceleration/ deceleration	Min. speed (mm/s)	4
Vertical	Speed / acceleration/ deceleration	Rated acceleration/ deceleration (G)	0.3
Vertical	Speed / acceleration/ deceleration	Max. acceleration/deceleration (G)	0.5
Brake		Brake specification	Non-excitation actuating solenoid brake
Brake		Brake holding force (kgf)	12.5
Stroke (mm)			50

(Note 6) With speed of 200mm/s and acceleration/deceleration of 0.5G.

Item	Description
Drive system	Ball screw, ϕ10mm, rolled C10
Positioning repeatability	±0.15mm
Lost motion	- (notation not available due to 2-point positioning function)
Rod	ϕ25mm, material: aluminum, hard alumite treatment
Guide shaft	S45C
Front bracket	S45C
Ambient operating temperature, humidity	0 ~ 40°C, 85%RH or less (no condensation)
Ingress protection	IP20
Vibration & shock resistance	4.9m/s^2
Overseas standards	CE marking, RoHS directive
Motor type	Stepper motor (□42)
Encoder type	Incremental/battery-less absolute
Number of encoder pulses	800 pulse/rev

Correlation Diagram of Workpiece Mass and Workpiece Impact Speed

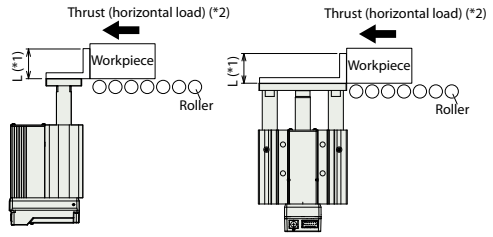

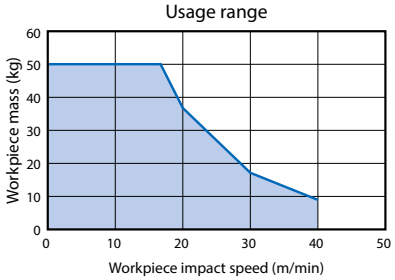

(*1) Use within L dimension of 50mm.
(*2) Use with allowable load of 500N or less for the thrust from a conveyor, etc.

Dimensions

CAD drawings can be downloaded from our website.
www.intelligentactuator.com

(Note) When the rod is returning to its home position, please be mindful of possible interference from nearby objects, as it will travel until it reaches the M.E.

ST: Stroke
M.E: Mechanical end
S.E: Stroke end

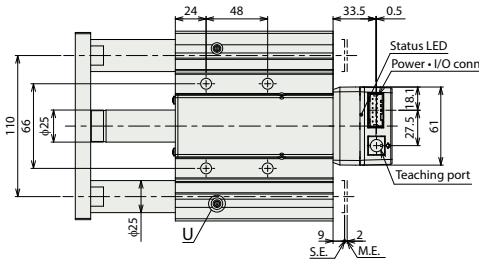

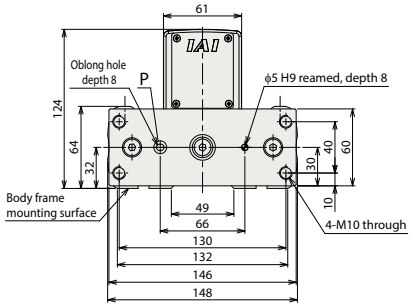

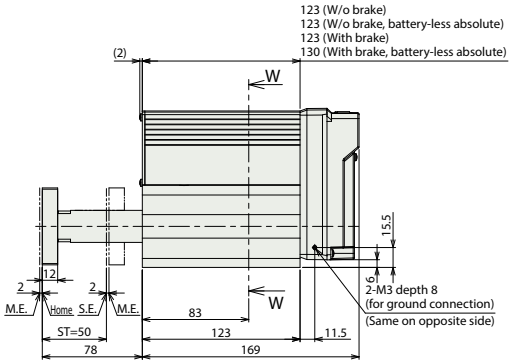

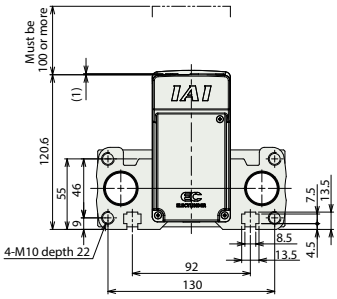

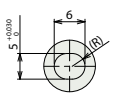

Detailed view of P
Front bracket oblong hole details

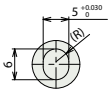

Detailed view of Q
Body frame oblong hole details

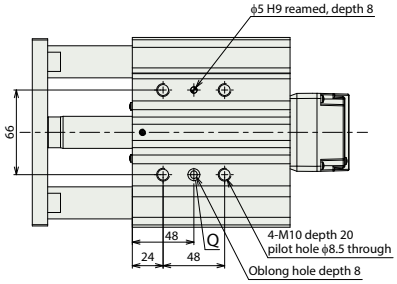

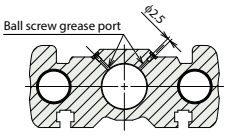

Cross section of W-W
Detail of ball screw grease lubrication port

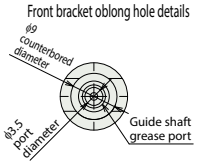

Detailed view of U
Grease lubrication port

Mass

Stroke		50
Mass (kg)	Without brake	5.06
	With brake	5.36

Applicable Controllers

(Note) EC Series products are equipped with a built-in controller. Please refer to P. 16 for details on built-in controllers.

EC-ST15ME

Side-mounted Motor | Body Width 150 mm | 24V Stepper Motor

Model Specification Items

EC	-	ST15	M	E	-	50	-		-	
Series	-	Type	Lead	Specifications	-	Stroke	-	Power • I/O cable length	-	Options
			M 6mm	E ECO type		50 50mm		See power • I/O cable length table below		See options below

CE RoHS 10

Vertical | Horizontal | Side | Ceiling

Selection Notes

(1) Use should be restricted to stopper applications. We do not recommend use for other applications.
(2) The home position is set to the motor side. Please check Dimensions for the home position.
(3) Use with allowable load of 500N or less for the thrust (horizontal load) from a conveyor, etc.

Operation Range

Stroke (mm)	EC-ST11
50	○

Options * Please check the Options reference pages to confirm each option.

Name	Option code	Reference page
RCON-EC connection specification (Note 1)	**ACR**	11
Opposite home position specification (Note 2)	**NM**	11
PNP specification	**PN**	12
Split motor and controller power supply specification	**TMD2**	12
Wireless communication specification	**WL**	12
Wireless axis operation specification	**WL2**	12

(Note 1) If the RCON-EC connection specification (ACR) is selected, the PNP specification (PN) and split motor and controller power supply specification (TMD2) cannot be selected.
(Note 2) Standard specification homes away from the motor end. Opposite specification homes at the motor end.

Power • I/O Cable Length

Standard Connector Cable

Cable code	Cable length	User wiring specification (flying leads)	RCON-EC connection specification (Note 3) (with connectors on both ends)
		CB-EC-PWBIO□□□-RB supplied	CB-REC-PWBIO□□□-RB supplied
0	Without cable	○(Note 2)	○
1 ~ 3	1 ~ 3m	○	○
4 ~ 5	4 ~ 5m	○	○
6 ~ 7	6 ~ 7m	○	○
8 ~ 10	8 ~ 10m	○	○

(Note 2) Only terminal block connector is included. Please refer to P. 18 for details.
(Note 3) If RCON-EC connection specification (ACR) is selected as an option.
(Note) Robot cable.

4-way Connector Cable

Cable code	Cable length	User wiring specification (flying leads)	RCON-EC connection specification (Note 4) (with connectors on both ends)
		CB-EC2-PWBIO□□□-RB supplied	CB-REC2-PWBIO□□□-RB supplied
S1 ~ S3	1 ~ 3m	○	○
S4 ~ S5	4 ~ 5m	○	○
S6 ~ S7	6 ~ 7m	○	○
S8 ~ S10	8 ~ 10m	○	○

(Note 4) If RCON-EC connection specification (ACR) is selected as an option.
(Note) Robot cable.

Main Specifications

Item			Description
Lead		Ball screw lead (mm)	6
Vertical	Payload (Note 5)	Max. payload (kg) (energy-saving disabled)	10
Vertical	Speed / acceleration/ deceleration	Max. speed (mm/s)	225
Vertical	Speed / acceleration/ deceleration	Min. speed (mm/s)	8
Vertical	Speed / acceleration/ deceleration	Rated acceleration/deceleration (G)	1
Vertical	Speed / acceleration/ deceleration	Max. acceleration/deceleration (G)	1
Stroke (mm)			50

(Note 5) With speed of 225mm/s and acceleration/deceleration of 1G.
(Note) The max. payload is a guideline for the stopper jig weight.

Item	Description
Drive system	Ball screw, ϕ10mm, rolled C10
Positioning repeatability	±0.15mm
Lost motion	- (notation not available due to 2-point positioning function)
Rod	ϕ25mm, material: aluminum, hard alumite treatment
Guide shaft	S45C
Front bracket	Material: Aluminum, white alumite treatment
Ambient operating temperature, humidity	0 ~ 40°C, 85%RH or less (no condensation)
Ingress protection	IP20
Vibration & shock resistance	4.9m/s^2
Overseas standards	CE marking, RoHS directive
Motor type	Stepper motor (□42)
Encoder type	Incremental
Number of encoder pulses	800 pulse/rev

Correlation Diagram of Workpiece Mass and Workpiece Impact Speed

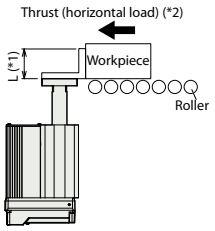

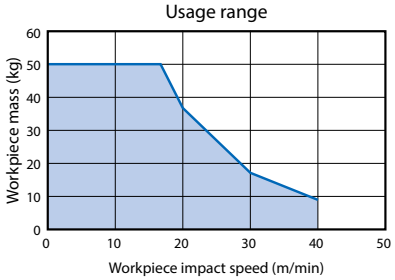

(*1) Use within L dimension of 50mm.
(*2) Use with allowable load of 500N or less for the thrust from a conveyor, etc.

Dimensions

CAD drawings can be downloaded from our website.
www.intelligentactuator.com

(Note) When the rod is returning to its home position, please be mindful of possible interference from nearby objects, as it will travel until it reaches the M.E.
(Note) There is no grease port for grease lubrication mounted.
(Note) There is no ball screw grease port.

ST: Stroke
M.E: Mechanical end
S.E: Stroke end

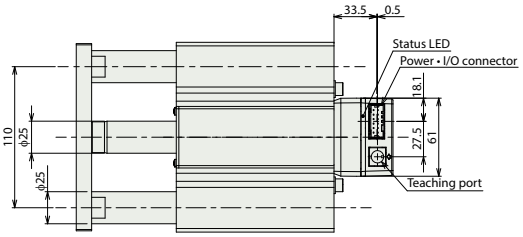

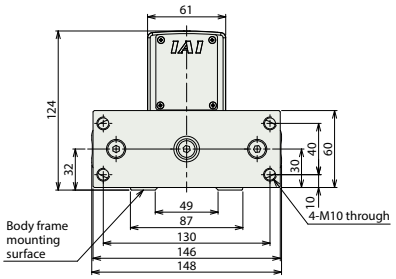

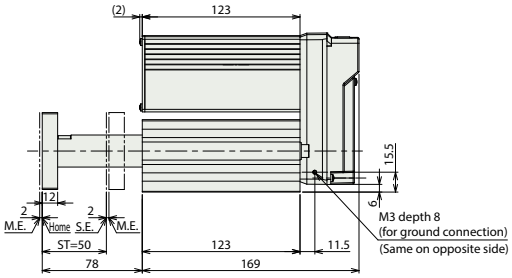

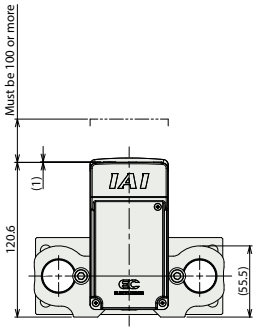

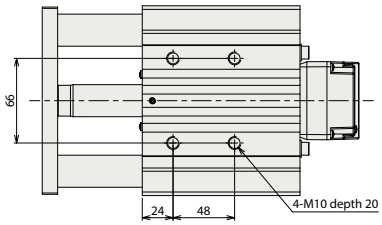

Mass

Stroke	50
Mass (kg)	3.8

Applicable Controllers

(Note) EC Series products are equipped with a built-in controller. Please refer to P. 16 for details on built-in controllers.

ELECYLINDER Series Options

RCON-EC connection specification

*Cannot be selected with the TMD2 and PN options (the ACR option includes the split motor and controller power supply specification)

Model **ACR**

Description This option should be selected to connect over an R-unit to a field network.
*If this option is selected, the power supply must be a twin power supply and the input/output specification must be NPN. Therefore, it cannot be selected with the TMD2 or PN options.

Brake *Not available for ECO type (EC-ST15ME)

Model **B**

Description When the actuator is mounted vertically, this works as a holding mechanism that prevents the rod from falling and damaging any attachments when the power or servo is turned off.

Front spacer *EC-ST11 only

Model **FS**

Description When selecting the brake option, this option is to be selected when there is interference between the workpiece and the motor unit.

Individual model number EC-FS-ST11
(Individual weight: 0.3kg / Material: Aluminum)

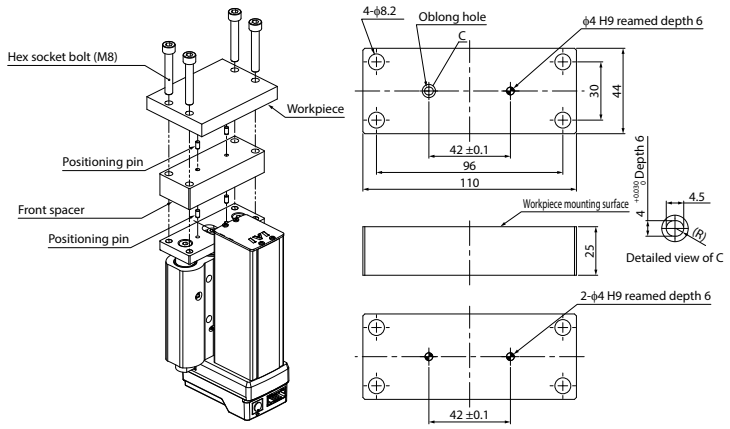

Designated grease specification *Not available for ECO type (EC-ST15ME)

Model **G5**

Description The grease applied to the actuator ball screw, linear guide, and rod sliding surface is changed to food processing machine grease (White Alcom grease).

Opposite home position specification

Model **NM**

Description For the standard specification, the home position is away from the motor end. This option is for setting the home position at the motor end in order to accommodate variations in equipment layout, etc.

PNP specification *Cannot be ordered simultaneously with the ACR option, which is NPN specification.

Model **PN**

Description EC Series products provide NPN specification input/output for connecting external devices as standard.
Specifying this option changes input/output to the PNP specification.

Split motor and controller power supply specification

* Cannot be selected with the ACR option (the RCON-EC connection specification is a split motor and controller power supply specification)

Model **TMD2**

Description This option includes an actuator operation stop input.
Select this option to allow shutting down the actuator drive power only.
Please refer to P. 17 for more information on wiring.

Battery-less absolute encoder specification *Not available for ECO type (EC-ST15ME)

Model **WA**

Description The EC series offers incremental encoder specification as standard.
Specifying this option installs a built-in battery-less absolute encoder.

Wireless communication specification

Model **WL**

Description This option enables support for wireless communication. Specifying this option enables wireless communication with the TB-03 teaching pendant.
The start point, end point, and AVD can be adjusted via wireless communication.

Wireless axis operation specification

Model **WL2**

Description Specifying WL2 allows the product to operate wirelessly as with WL (start point, end point, and AVD adjustment), and also to perform axis travel operation tests (forward end/backward end movement, jog, and inching). However, this function is not meant to perform automatic operation. Refer to P. 2-436 of the General Catalog 2021 for precautions on axis operations using a wireless connection.
(Note) Customers cannot change WL to WL2, or WL2 to WL. Please contact IAI for this.

Maintenance part schematics

ST11 type

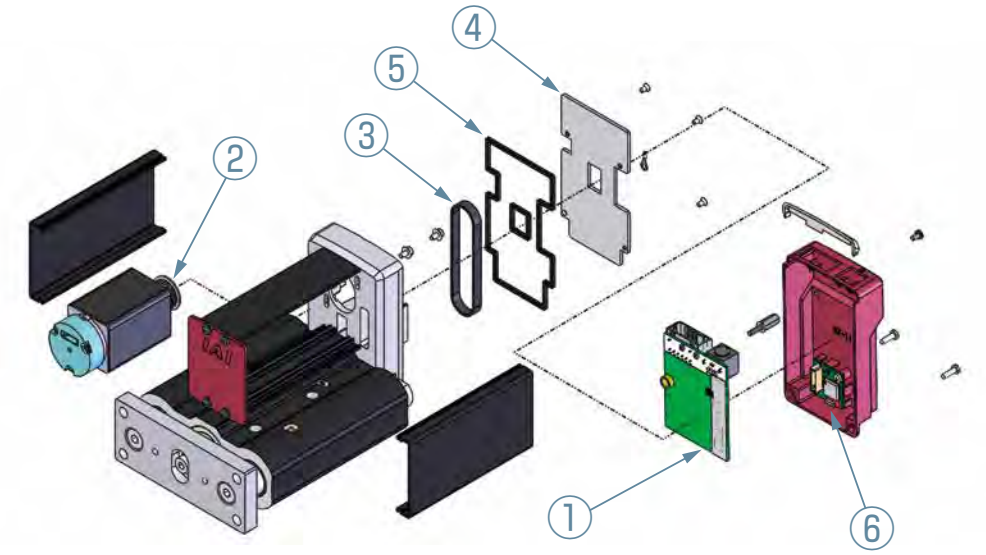

ST15 type

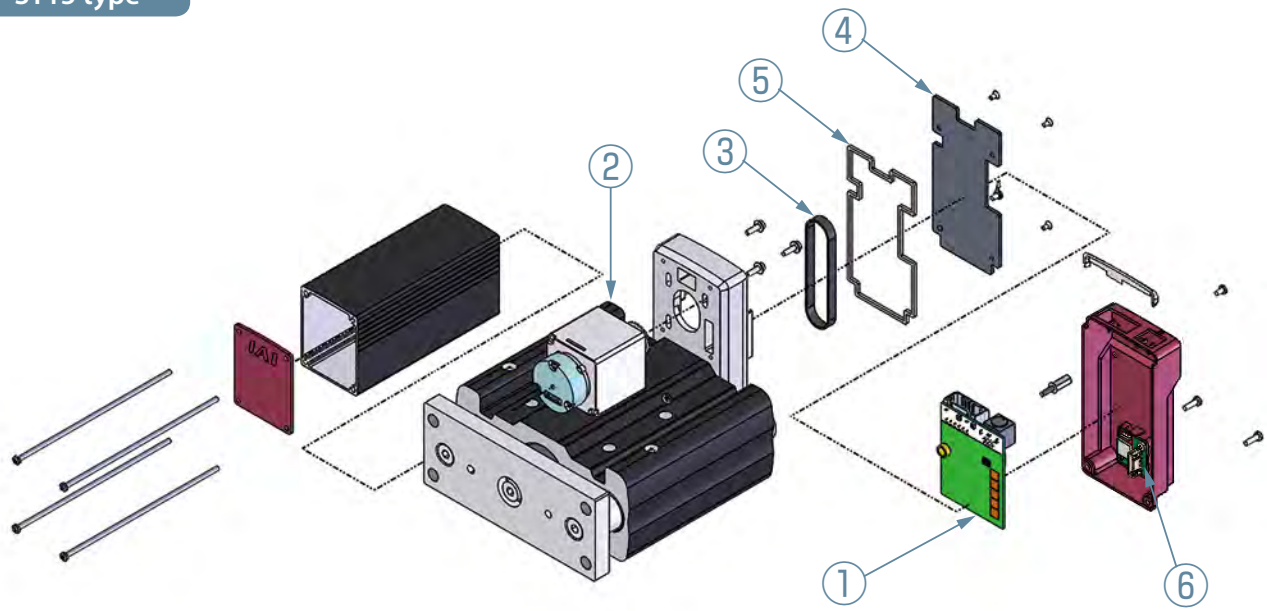

① Controller board
② Motor unit
③ Timing belt
④ Side-mounted cover
⑤ Gasket
⑥ Controller cover (end cover assembly)

Maintenance part model list

ST11 type
ST15 type
ST15ME type

① -1 Controller board*

Type	Wireless	I/O	Model
ST11 ST15	No/WL	NPN	MB-EC-ST15
		PNP	MB-EC-ST15-P
	WL2	NPN	MB-EC-ST15-WL2
		PNP	MB-EC-ST15-P-WL2

① -2 Split motor and controller power supply controller board*

Type	Wireless	I/O	Model
ST11 ST15	No/WL	NPN	MB-EC-ST15-TMD2
		PNP	MB-EC-ST15-P-TMD2
	WL2	NPN	MB-EC-ST15-TMD2-WL2
		PNP	MB-EC-ST15-P-TMD2-WL2

① -3 Split motor and controller power supply controller board RCON-EC connection specification (option model: ACR)*

Type	Wireless	I/O	Model
ST11 ST15	No/WL	NPN_ REC	MB-EC-ST15-ACR
	WL2		MB-EC-ST15-ACR-WL2

*Wireless communication circuit board is not included.

② Motor unit

Type	Encoder	Brake	Model
ST11	Incremental	No	EC-MUST11
		Yes	EC-MUST11-B
	Battery-less absolute	No	EC-MUST11-WA
		Yes	EC-MUST11-WA-B
ST15	Incremental	No	EC-MUST15
		Yes	EC-MUST15-B
	Battery-less absolute	No	EC-MUST15-WA
		Yes	EC-MUST15-WA-B

③ Timing belt

Type	Model
ST11 ST15	TB-EC-ST15

④ Side-mounted cover

Type	Model
ST11	PT-EC-ST11
ST15	PT-EC-ST15

⑤ Gasket

Type	Model
ST11	ECST-GK-ST11
ST15	ECST-GK-ST15

⑥ Controller cover (end cover assembly)

Type	Model
ST11	EWB-EC-ST11
ST15	EWB-EC-ST15

System Configuration

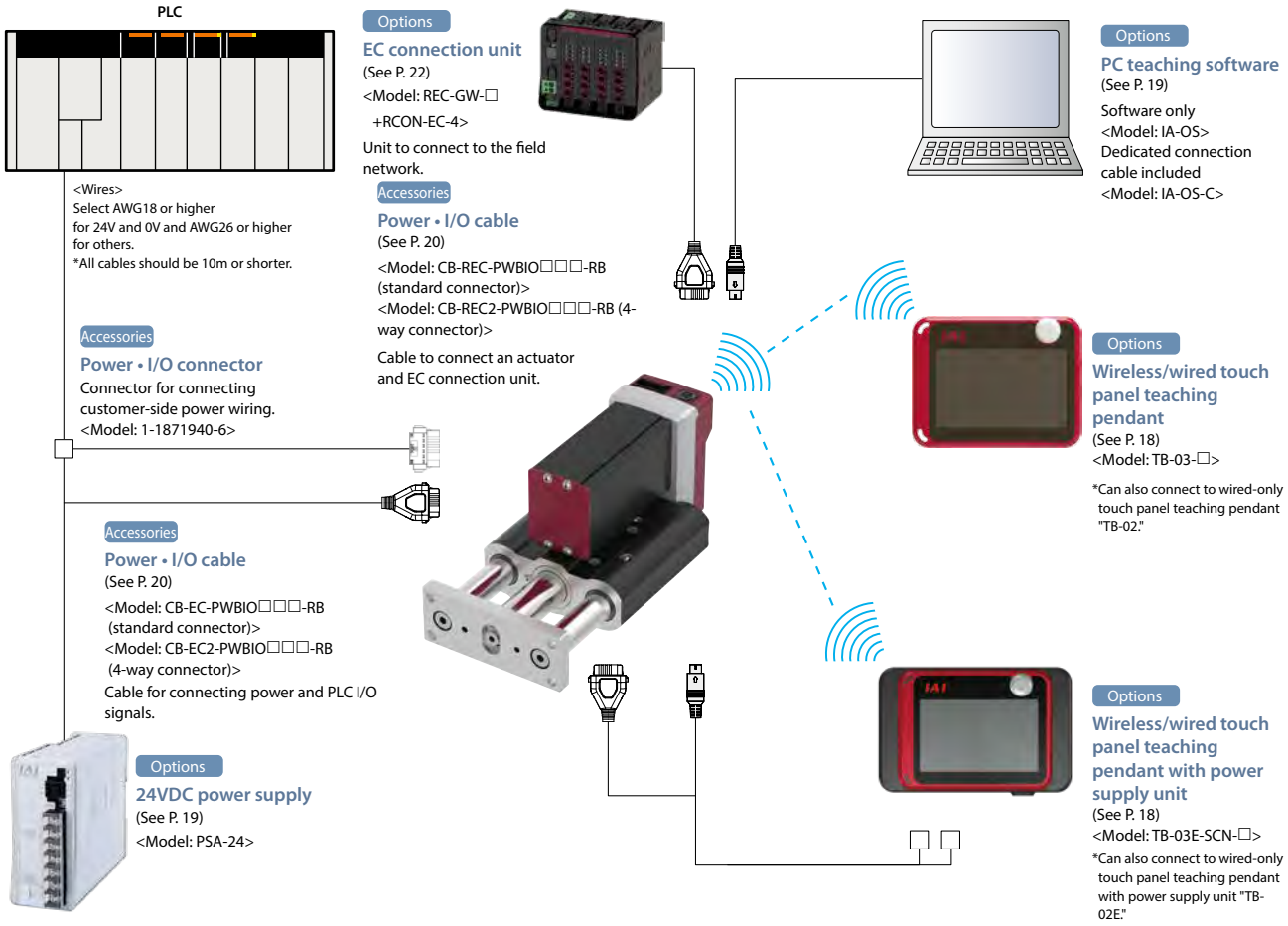

List of Accessories

■ Power • I/O Cables, Connectors

[Standard connector]

Product category		Accessories
Power • I/O cable length (selected with actuator model)	RCON-EC connection specification (ACR) selection	
0	None	Power • I/O connector (1-1871940-6)
	Yes	—
1 to 10	None	Power • I/O cable (CB-EC-PWBIO□□□-RB)
	Yes	Power • I/O cable (CB-REC-PWBIO□□□-RB)

[Four-way connector]

Product category		Accessories
Power • I/O cable length (selected with actuator model)	RCON-EC connection specification (ACR) selection	
S1 ~ S10	None	Power • I/O cable (CB-EC2-PWBIO□□□-RB)
	Yes	Power • I/O cable (CB-REC2-PWBIO□□□-RB)

Basic Controller Specifications

Specification item			Specification content
Number of controlled axes			1 axis
Power supply voltage			24VDC ±10%
Power capacity (includes control power 0.3A) (Note 1)		ST11 ST15	Energy-saving setting disabled only: Rated 3.5A, max. 4.2A
Brake release power supply			24VDC ±10%, 200mA (only for external brake release)
Generated heat			8W (at 100% duty)
Inrush current (Note 2)		ST11 ST15	8.3A (with inrush current limit circuit)
Momentary power failure resistance			Max 500μs
Motor size			□35, □42
Motor rated current			1.2A
Motor control system			Weak field-magnet vector control
Supported encoders			Incremental (800 pulse/rev), battery-less absolute encoder (800 pulse/rev)
SIO			RS485 1ch (Modbus protocol compliant)
PIO	Input specification	No. of inputs	3 points (forward, backward, alarm clear)
		Input voltage	24VDC ±10%
		Input current	5mA per circuit
		Leakage current	Max. 1mA/1 point
		Isolation method	Non-isolated
	Output specification	No. of outputs	3 points (forward complete, backward complete, alarm)
		Output voltage	24VDC ±10%
		Output current	50mA/1 point
		Residual voltage	2V or less
		Isolation method	Non-isolated
Data setting, input method			PC teaching software, touch panel teaching pendant
Data retention memory			Position and parameters are saved in non-volatile memory (no limit to number of rewrites)
LED display	Controller status display		Servo ON (green light ON) / Alarm (red light ON) / Initializing when power comes ON (orange light ON) / Minor failure alarm (green/red alternately blinking) / Operation from teaching: Stop from teaching (red light ON) / Servo OFF (light OFF)
	Wireless status display		Initializing wireless hardware, without wireless connection, or connecting from TP board (light OFF) Connecting through wireless (green blinking) / Wireless hardware error (red blinking) / Initializing when power comes ON (orange light ON)
Predictive maintenance/preventative maintenance			When the number of movements or operation distance has exceeded the set value and when the LED (right side) blinks alternately green and red at overload warning *Only when configured in advance
Ambient operating temperature			0 ~ 40°C
Ambient operating humidity			5%RH ~ 85%RH (no condensation or freezing)
Operating ambience			No corrosive gas or excessive dust
Insulation resistance			500VDC 10MΩ
Electric shock protection mechanism			Class 1 basic insulation
Cooling method			Natural air cooling

(Note 1) When connecting to RCON-EC, control power 0.3A is subtracted from the value.
(Note 2) Inrush current flows for approximately 5ms after the power is input. (At 40°C) Inrush current value differs depending on the impedance on the power line.

Solenoid Valve Method

ELECYLINDER products normally use a double solenoid method.
Change parameter No. 9 ("solenoid valve type selection") to use the single solenoid method.

<Caution>
Operation cannot be performed using the single solenoid method when operating connected to RCON-EC.

I/O (Input/Output) Specifications

I/O		Input		Output	
Specifications		Input voltage	24VDC ±10%	Load voltage	24VDC ±10%
		Input current	5mA per circuit	Maximum load current	50mA/1 point
		ON/OFF voltage	ON voltage: MIN. 18VDC OFF voltage: MAX. 6VDC	Residual voltage	2V or less
		Leakage current	Max. 1mA/1 point	Leakage current	Max. 0.1mA/1 point
Isolation method		Non-isolated from external circuit		Non-isolated from external circuit	
I/O logic	NPN	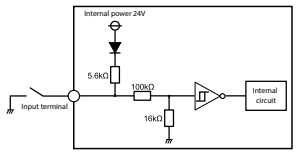		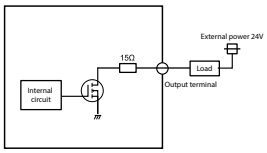	
	PNP	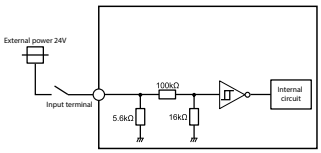		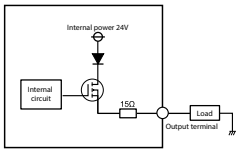	

(Note) Isolation method is non-isolated. When grounding an external device (such as a PLC) connected to ELECYLINDER, use the same ground as ELECYLINDER.

I/O Signal Wiring Diagram

I/O		Standard specification	Split motor and controller power supply specification (option model: TMD2)
Power I/O connector		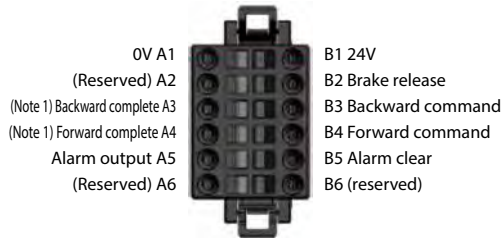	Drive power and control power are separate for the TMD2 specification. 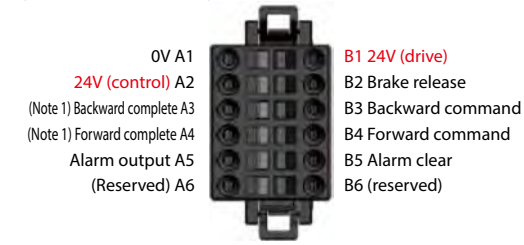
I/O logic	NPN	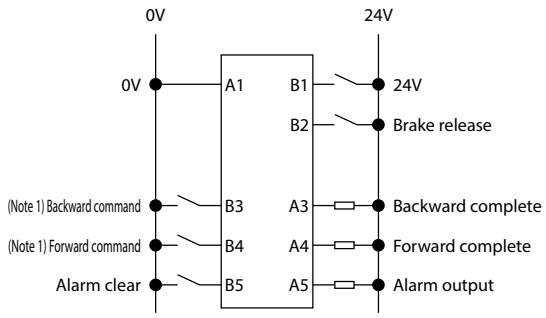	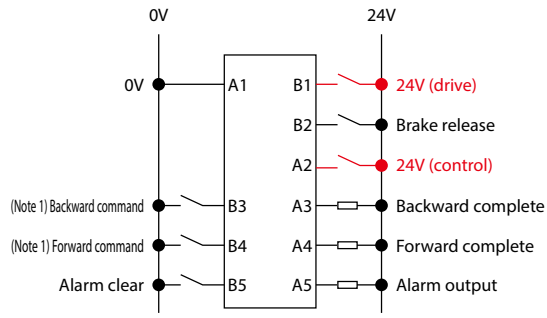
	PNP	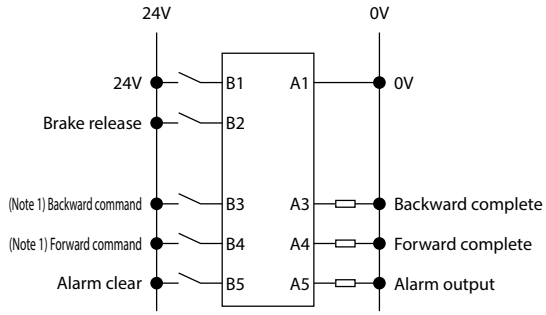	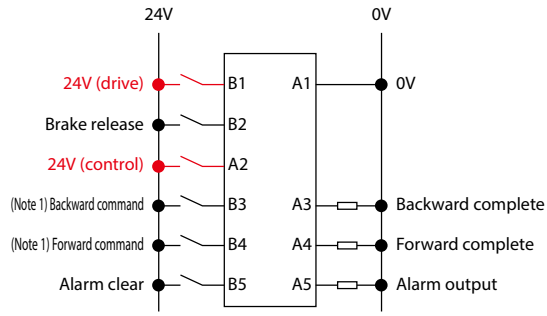

(Note 1) Switching to the single solenoid method will change B3 to "forward/backward command" and B4 to "unused."

I/O Signal Table

Power • I/O connector pin assignment			
Pin No.	Connector nameplate name	Signal abbreviation	Function overview
B3 (Note 1)	Backward	ST0	Backward command
B4 (Note 1)	Forward	ST1	Forward command
B5	Alarm clear	RES	Alarm clear
A3	Backward complete	LS0/PE0	Backward complete/push complete
A4	Forward complete	LS1/PE1	Forward complete/push complete
A5	Alarm	*ALM	Alarm detection (b-contact)
B2	Brake release	BKRLS	Brake forced release (for brake equipped specification)
B1 (Note 2)	24V	24V	24V input
A1	0V	0V	0V input
A2 (Note 2)	(24V)	(24V)	24V input

(Note 1) Switching to the single solenoid method will change B3 to "forward/backward" and B4 to "unused." However, the power • I/O connector display will still read "B3: Backward" and "B4: Forward."

(Note 2) B1 is 24V (drive) and A2 is 24V (control) for the split motor and controller power supply specification (TMD2).

Options

Wireless/wired touch panel teaching pendant

Features This teaching device supports wireless connections.
Start point/end point/AVD (acceleration/velocity/deceleration) input and axis operation can be performed wirelessly.

Model **TB-03-□** Please contact IAI for the current supported versions.

Configuration Wireless or wired connection

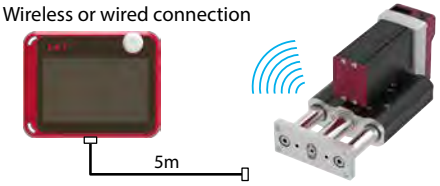

Wired/wireless touch panel teaching pendant with power supply unit

Model **TB-03E-□** Please contact IAI for the current supported versions.

Configuration Wireless or wired connection

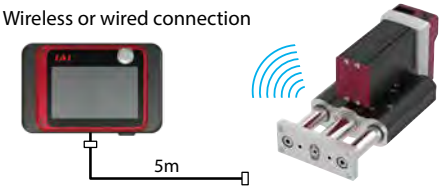

TB-03 Body Specifications

Rated voltage	24VDC
Power consumption	3.6W or less (150mA or less)
Ambient operating temperature	0 ~ 40°C
Ambient operating humidity	5 ~ 85%RH (no condensation)
Environmental resistance	IPX0
Mass	Approx. 485g (body) + approx. 175g (battery)
Charging method	Wired connection with dedicated AC adapter/controller
Wireless connection	Bluetooth 4.2 class2

Power Supply Unit Specifications

Rated input voltage	Single-phase 100 ~ 230VAC±10%
Input current (Under rated I/O conditions in ambient temperature of 25°C)	1.4A typ. (100VAC) 0.6A typ. (230VAC)
Frequency range	50/60Hz ±5%
Power capacity (Under rated I/O conditions in ambient temperature of 25°C)	141VA (100VAC) 145VA (230VAC)
Output voltage	24VDC ±10%
Load current	With energy-saving setting disabled: Rated 3.5A, max. 4.2A With energy-saving setting enabled: Rated 2.2A
Output capacity	With energy-saving setting disabled: Rated 84W, max. 98.4W With energy-saving setting enabled: Rated 52.8W
Ambient operating temperature	0 ~ 40°C (no condensation or freezing)
Ambient operating humidity	5%RH ~ 85%RH (no condensation or freezing)
Ambient storage temperature	-20 ~ 70°C
Atmosphere	No corrosive gas or excessive dust
Altitude	1000m or less above sea level
Vibration resistance	Frequency: 10 ~ 57Hz / Amplitude: 0.075mm Frequency: 57 ~ 150Hz / Acceleration: 9.8m/s^2 [XYZ directions] Sweep time: 10 minutes, Number of sweeps: 10
Ingress protection	IP30
Mass	Approx. 740g
Cooling method	Natural air cooling

PC teaching software (Windows only)

Features This start-up support software provides functions such as position teaching, trial operation, and monitoring. It provides a complete range of functions required to make adjustments, to help reduce start-up time.

Model **IA-OS** (software only, for customers who already own a dedicated connection cable)

* Please purchase through your distributor and a download link will be sent to your valid email address.

Please contact IAI for the current supported versions.

Configuration

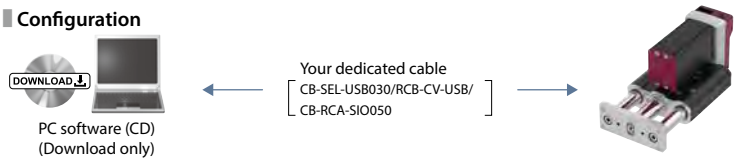

Model **IA-OS-C** (with an external device communication cable + USB conversion adapter + USB cable)

* Please purchase through your distributor and a download link will be sent to your valid email address.

Please contact IAI for the current supported versions.

Configuration

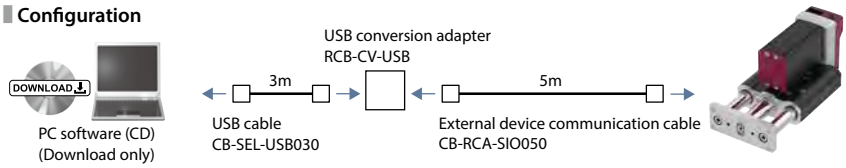

24V power

Model **PSA-24 (without fan)**

Model **PSA-24L (with fan)**

Specifications Table

Item	Specification	
	100VAC input	200VAC input
Power input voltage range	100VAC ~ 230 VAC ±10%	
Input power supply current	3.9A or less	1.9A or less
Power capacity	Without fan: 250VA With fan: 390VA	Without fan: 280VA With fan: 380VA
Inrush current*1	Without fan: 17A (typ.) With fan: 27.4A (typ.)	Without fan: 34A (typ.) With fan: 54.8A (typ.)
Generated heat	28.6W	20.4W
Output voltage range*2	24V ±10%	
Continuous rated output	Without fan: 8.5A (204W), with fan: 13.8A (330W)	
Peak output	17A (408W)	
Efficiency	86% or more	90% or more
Parallel connection*3	Up to 5 units	

*1 The pulse width of flowing inrush current is less than 5ms.
*2 This power supply can vary the output voltage according to the load in order to enable parallel operation. The power supply unit is therefore for use with IAI controllers only.
*3 Parallel connection cannot be used under the following conditions.
- Parallel connection of PSA-24 (specification without fan) and PSA-24L (specification with fan)
- Parallel connection with a power supply unit other than this power supply
- Parallel connection with PS-24

External Dimensions

PSA-24

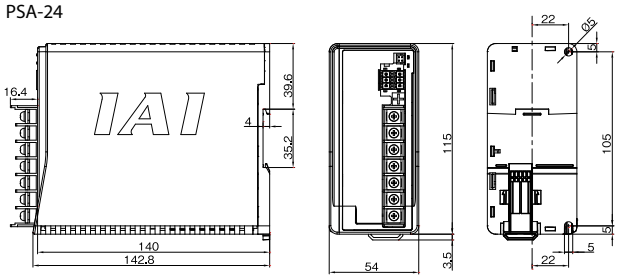

PSA-24L

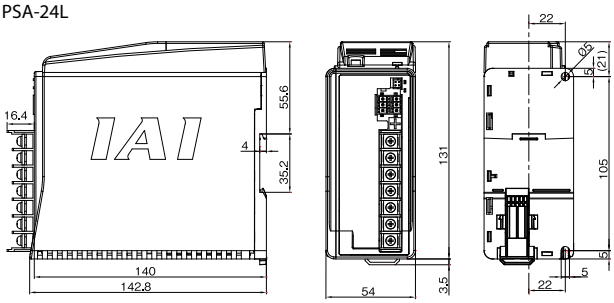

Maintenance Parts

When placing an order for a replacement cable after purchasing a product, please use the model name shown below.

■ Table of Compatible Cables

Cable type	Cable model
Power • I/O cable (user-wired specification)	CB-EC-PWBIO□□□-RB
Power • I/O cable (user-wired specification, four-way connector)	CB-EC2-PWBIO□□□-RB
Power • I/O cable (RCON-EC connection specification)	CB-REC-PWBIO□□□-RB
Power • I/O cable (RCON-EC connection specification, four-way	CB-REC2-PWBIO□□□-RB

Model CB-EC-PWBIO□□□-RB

*Please indicate the cable length (L) in □□□ (for example, 030 = 3m)

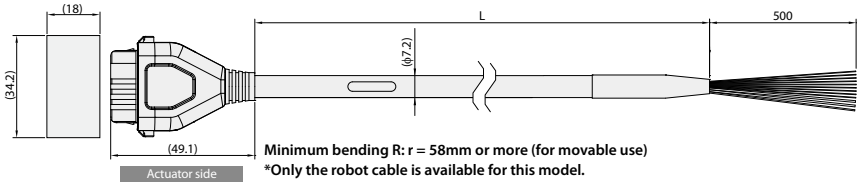

Minimum bending R: r = 58mm or more (for movable use)
***Only the robot cable is available for this model.**

Color	Signal name	Pin No.
Black (AWG18)	0V	A1
Red (AWG18)	24V	B1
Light blue (AWG22)	(Reserved) (Note 1)	A2
Orange (AWG26)	IN0	B3
Yellow (AWG26)	IN1	B4
Green (AWG26)	IN2	B5
Pink (AWG26)	(Reserved)	B6
Blue (AWG26)	OUT0	A3
Purple (AWG26)	OUT1	A4
Gray (AWG26)	OUT2	A5
White (AWG26)	(Reserved)	A6
Brown (AWG26)	BKRLS	B2

(Note 1) 24V (control) when split motor and controller power supply specification (TMD2) is selected.

Model CB-EC2-PWBIO□□□-RB

*Please indicate the cable length (L) in □□□ (for example, 030 = 3m)

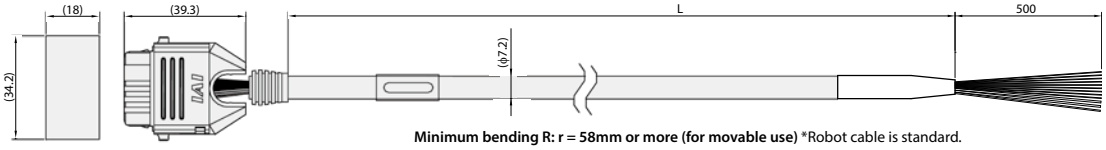

Minimum bending R: r = 58mm or more (for movable use) *Robot cable is standard.

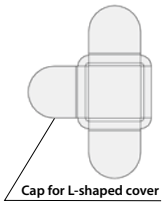

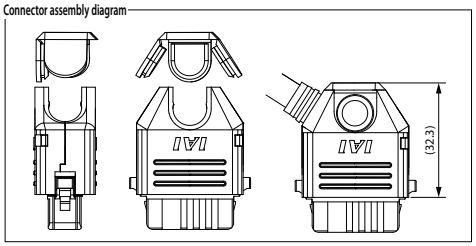

Color	Signal name	Pin No.
Black (AWG18)	0V	A1
Red (AWG18)	24V	B1
Light blue (AWG22)	(Reserved) (Note 1)	A2
Orange (AWG26)	IN0	B3
Yellow (AWG26)	IN1	B4
Green (AWG26)	IN2	B5
Pink (AWG26)	(Reserved)	B6
Blue (AWG26)	OUT0	A3
Purple (AWG26)	OUT1	A4
Gray (AWG26)	OUT2	A5
White (AWG26)	(Reserved)	A6
Brown (AWG26)	BKRLS	B2

(Note 1) 24V (control) when split motor and controller power supply specification (TMD2) is selected.

Model CB-REC-PWBIO□□□-RB

*Please indicate the cable length (L) in □□□, maximum 10m (for example, 030 = 3m)

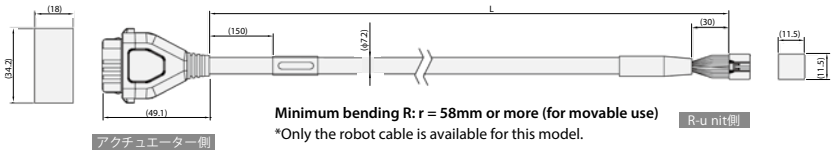

Minimum bending R: r = 58mm or more (for movable use)
*Only the robot cable is available for this model.

Color	Signal name	Pin No.
Black (AWG18)	0V	A1
Red (AWG18)	24V (MP)	B1
Light blue (AWG22)	24V (CP)	A2
Orange (AWG26)	IN0	B3
Yellow (AWG26)	IN1	B4
Green (AWG26)	IN2	B5
Yellow (AWG26)	SD+	B6
Light gray (AWG26)	SD-	A6
Blue (AWG26)	OUT0	A3
Purple (AWG26)	OUT1	A4
Gray (AWG26)	OUT2	A5
Brown (AWG26)	BKRLS	B2

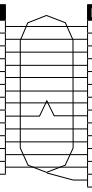

Pin No.	Signal name	Color
2	0V	Black (AWG22)
1	24V (MP)	Red (AWG22)
12	24V (CP)	Light blue (AWG22)
7	OUT0	Orange (AWG26)
8	OUT1	Yellow (AWG26)
9	OUT2	Green (AWG26)
6	SD+	Yellow (AWG26)
10	SD-	Light gray (AWG26)
3	INO	Blue (AWG26)
4	IN1	Purple (AWG26)
5	IN2	Gray (AWG26)
11	BKRLS	Brown (AWG26)
13	FG	Green (AWG26)

Model CB-REC2-PWBIO□□□-RB

*Please indicate the cable length (L) in □□□, maximum 10m (for example, 030 = 3m)

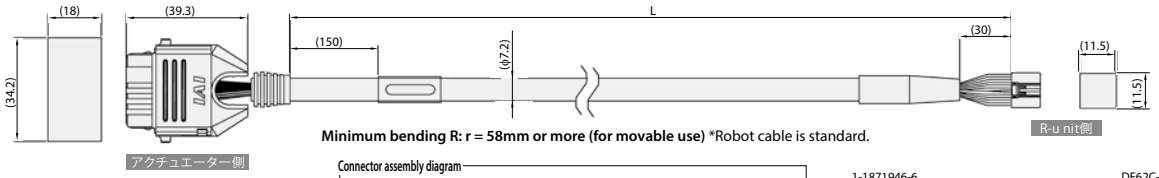

Minimum bending R: r = 58mm or more (for movable use) *Robot cable is standard.

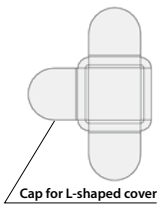

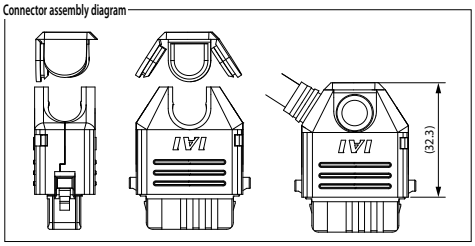

1-1871946-6

Color	Signal name	Pin No.
Black (AWG18)	0V	A1
Red (AWG18)	24V (MP)	B1
Light blue (AWG22)	24V (CP)	A2
Orange (AWG26)	IN0	B3
Yellow (AWG26)	IN1	B4
Green (AWG26)	IN2	B5
Yellow (AWG26)	SD+	B6
Light gray (AWG26)	SD-	A6
Blue (AWG26)	OUT0	A3
Purple (AWG26)	OUT1	A4
Gray (AWG26)	OUT2	A5
Brown (AWG26)	BKRLS	B2

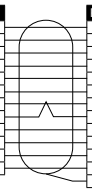

DF62C-13S-2C(18)

Pin No.	Signal name	Color
2	0V	Black (AWG22)
1	24V (MP)	Red (AWG22)
12	24V (CP)	Light blue (AWG22)
7	OUT0	Orange (AWG26)
8	OUT1	Yellow (AWG26)
9	OUT2	Green (AWG26)
6	SD+	Yellow (AWG26)
10	SD-	Light gray (AWG26)
3	INO	Blue (AWG26)
4	IN1	Purple (AWG26)
5	IN2	Gray (AWG26)
11	BKRLS	Brown (AWG26)
13	FG	Green (AWG26)

■ Four-way Connector Cable

This cable allows the connector direction to be changed to any of 4 directions.
The cable management for the connector is the same as that of CB-(R)EC-PWBIO□□□-RB.

Model number: CB-EC2-PWBIO□□□-RB (user wiring specification)
CB-REC2-PWBIO□□□-RB (RCON-EC connection specification)

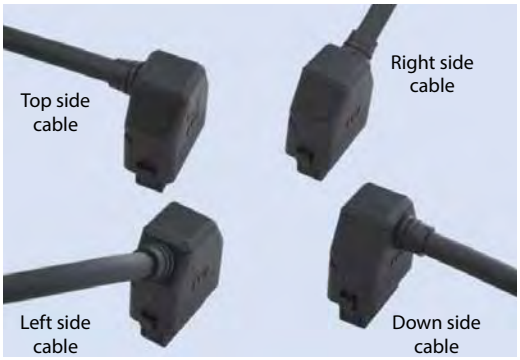

Cable direction can be set to any of 4 directions

- The wiring on the side opposite the connector is left unprepared (**CB-EC2-PWBIO□□□-RB).**
- The cable length may be from 1m to 10m long.
  The length can be specified in 1m units.
- Example models are listed below.

Cable length **1**m	→	CB-(R)EC2-PWBIO**010**-RB
Cable length **3**m	→	CB-(R)EC2-PWBIO**030**-RB
Cable length **10**m	→	CB-(R)EC2-PWBIO**100**-RB

Follow the procedure below to assemble the connector in the desired direction.

① Insert while sliding along the groove in the desired direction from the semi-cylindrical curved portion.

② Confirm that the cable has been firmly inserted, and then insert the 2 sides of the lid along the groove.

③ Finally, press the remaining side of the lid.

REC Introducing REC

Connect ELECYLINDER® to a field network(*)

This field network connection unit is specifically for use with ELECYLINDER®.

It allows up to 16 axes of ELECYLINDER® to be connected.

It is ideal for saving wiring and space inside the control panel.

*Select the RCON-EC connection specification (ACR) option to connect to a field network.

RCON-EC
(EC connection unit) =
4-axis specification x 4 units

Max. 16 axes

Compatible networks

CC-Link
CC-Link IE Field
DeviceNet
EtherNet/IP
EtherCAT
PROFIBUS
PROFINET

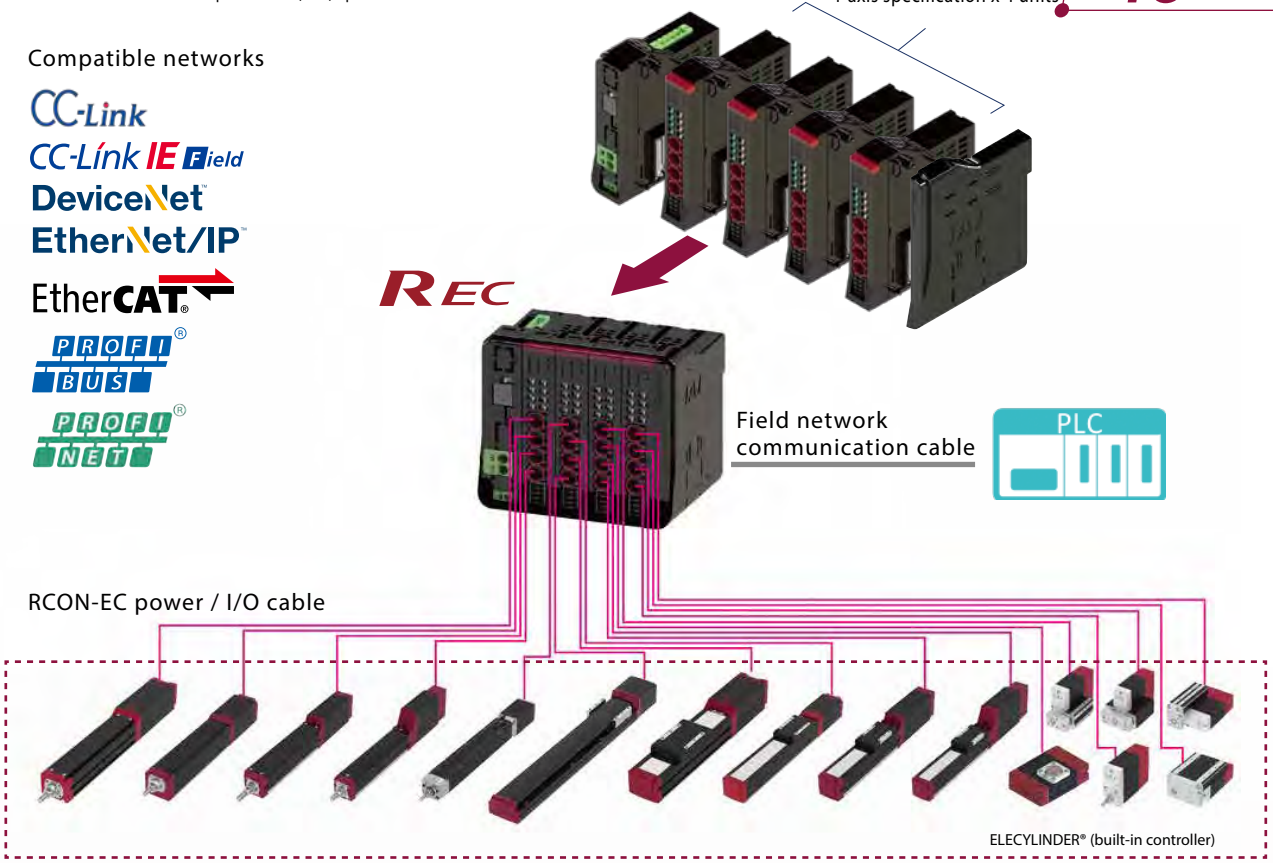

EC connection unit can be connected mixed with other driver units connected to RCON-RSEL

Connect to RCON-RSEL to allow mixed connections with ROBO Cylinder and single axis robots.

Refer to R-unit Catalog for details

Catalog No. CE0295-1.1A (2022OCT)

IAI America, Inc.
USA Headquarters & Western Region (Los Angeles) : 2690 W. 237th Street, Torrance, CA 90505 (310) 891-6015
Midwest Branch Office (Chicago) : 110 East State Parkway, Schaumburg, Illinois 60173 (847) 908-1400
Southeast Branch Office (Atlanta) : 1220 Kennestone Circle, Suite 108, Marietta, GA 30066 (678) 354-9470
www.intelligentactuator.com

JAPAN Headquarters : 577-1 Obane, Shimizu-ku, Shizuoka-shi, Shizuoka, 424-0103, JAPAN

IAI Industrieroboter GmbH
Ober der Röth 4, D-65824 Schwalbach am Taunus, Germany

IAI (Shanghai) Co., Ltd.
Shanghai Jiahua Business Center A8-303, 808,
Hongqiao Rd., Shanghai 200030, China

IAI Robot (Thailand) Co., Ltd.
825 Phairojkijja Tower 7th Floor, Debaratana Rd.,
Bangna Nuea, Bangna, Bangkok 10260, Thailand