Series HF04

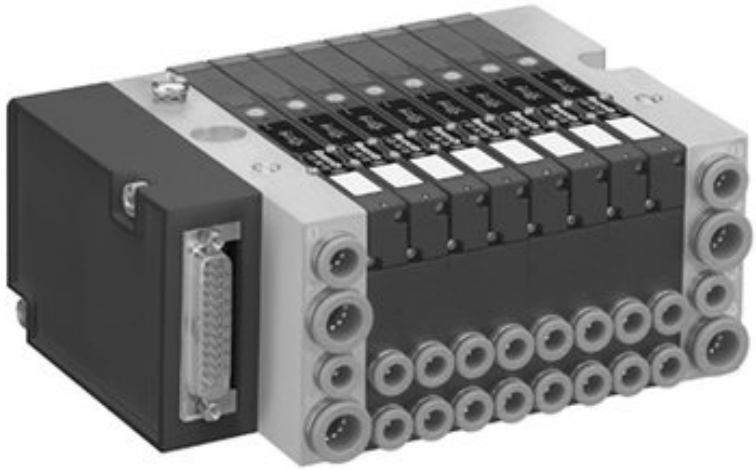

AVENTICS™ Series HF04

EMERSON.

Valve system, Series HF04

- Configurable valve systems, Multipole
Fieldbus

Blocking principle	Double base plate principle
Working pressure min./max.	-13 ... 145 psi
Control pressure min./max.	44 ... 116 psi
Ambient temperature min./max.	23 ... 122 °F
Medium temperature min./max.	32 ... 122 °F
Medium	Compressed air
Max. particle size	5 µm
Oil content of compressed air	0 ... 5 mg/m³
Nominal flow Qn	0.406 Cv
Number of valve positions max.	24
Number of solenoid coils max.	24
Protection class with connection	IP65
DC operating voltage	24 V
Voltage tolerance DC	-10% / +10%

An example configuration is illustrated. The delivered product may thus deviate from the illustration.

Overview of variants

	Version	You have the following options:
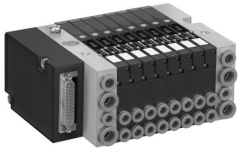	Multipole	D-Sub plug, 25-pin, on the side D-Sub plug, 44-pin, on the side
	Direct fieldbus connection	PROFIBUS DP CANopen DeviceNet PROFINET IO EtherCAT EtherNET/IP EtherNET/IP POWERLINK
	Fieldbus connection with AS i	4 outputs 8 outputs 4 inputs / 4 outputs 8 inputs / 8 outputs
	Fieldbus connection with I/O functionality (CMS)	PROFIBUS DP CANopen DeviceNet EtherNET/IP PROFINET IO
	Connection with diagnosis, optionally with I/O function (DDL)	PROFIBUS DP Interbus-S DeviceNet PROFINET IO
	Connection with diagnosis (DDL)	PROFIBUS DP Interbus-S DeviceNet PROFINET IO

Technical information

The min. control pressure must be adhered to, since otherwise faulty switching and valve failure may result!
The pressure dew point must be at least 27 °F under ambient and medium temperature and may not exceed 5.4 °F .
The oil content of compressed air must remain constant during the life cycle.
Use only the approved oils from AVENTICS. Further information can be found in the “Technical information” document (available in the MediaCentre).

See the following pages on the series for technical data on individual components.
For push-in fittings, only use plug accessories made of plastic (polyamide) from our catalog.
It is necessary to maintain the electrical current in the coil of double solenoid valves to avoid unexpected auto-switching.

Technical information

Material	
End plate	Aluminum
Plug box	Polyamide
Base plate	Polyamide

Dimensions

Dimensions in mm, D-Sub plug, 25-pin, on the side

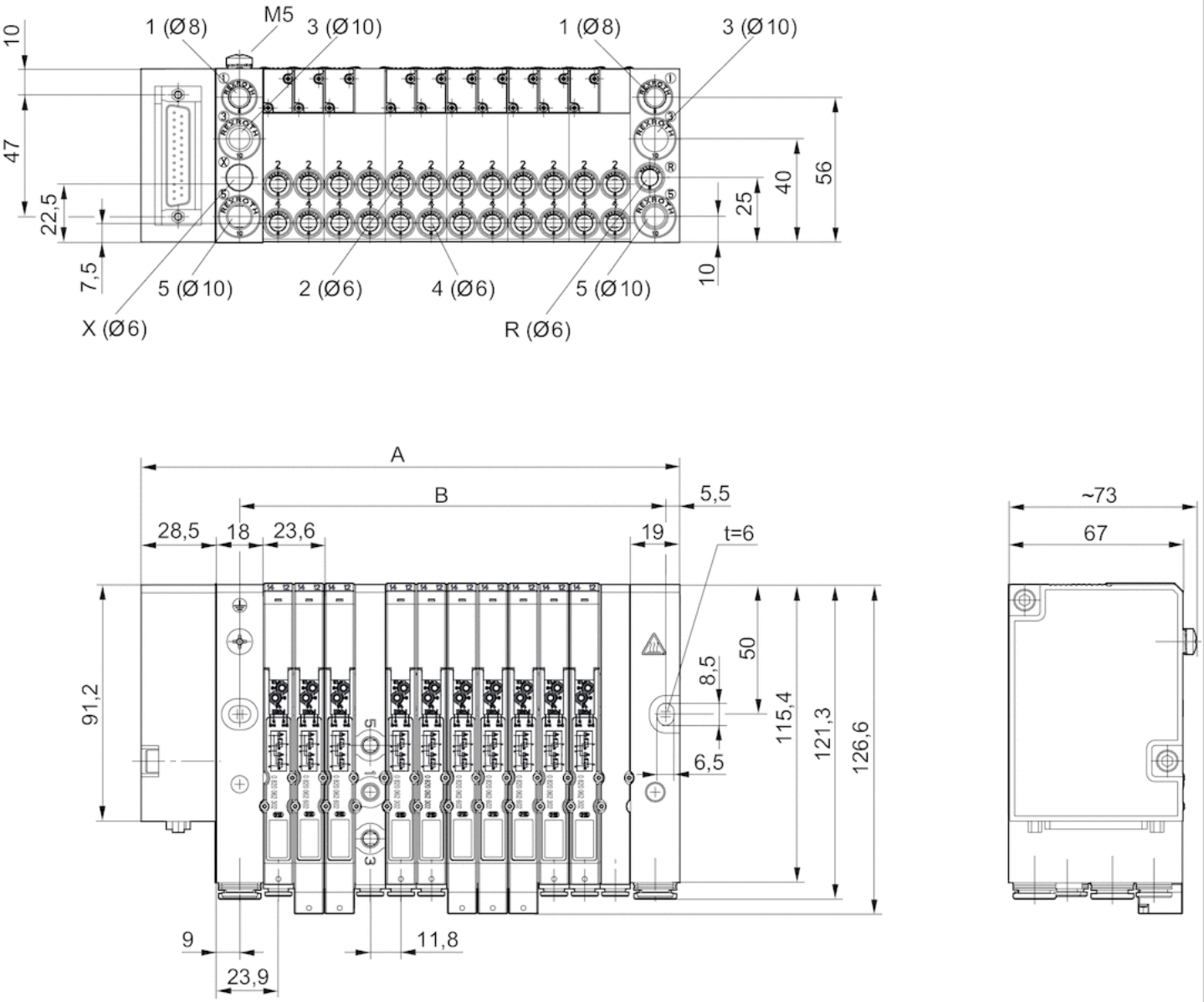

1 = plug-in connection Ø 8 mm or plug-in connection 3/8" (inch)
2 and 4 = plug-in connections Ø 6 mm or thread connections M7(inch)
3 and 5 = plug-in connections Ø 10 mm or plug-in connections 3/8" (inch)
R = collected pilot exhaust, plug-in connection Ø 6 mm or plug-in connection 1/4" (inch)
X = external pilot, plug-in connection Ø 6 mm or plug-in connection 1/4" (inch), connection X plugged with internal pilot control
An example configuration is illustrated. The delivered product may thus deviate from the illustration.

Dimensions

n	A	A
1	60.6	60.6
2	84.2	84.2

n	A	A
3	107.8	107.8
4	131.4	131.4
5	155	155
6	178.6	178.6
7	202	202
8	225.8	225.8
9	249.4	249.4
10	273	273
11	296.6	296.6
12	320	320

n = number of double subplates

Dimensions

Dimensions in mm, Direct fieldbus connection

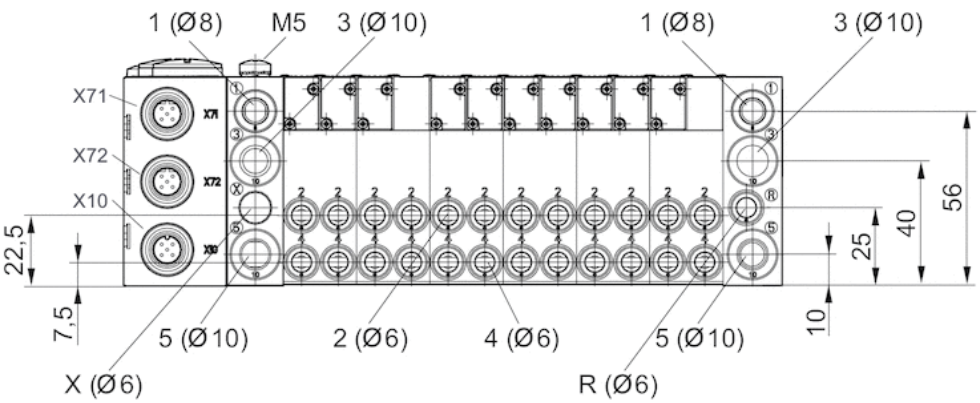

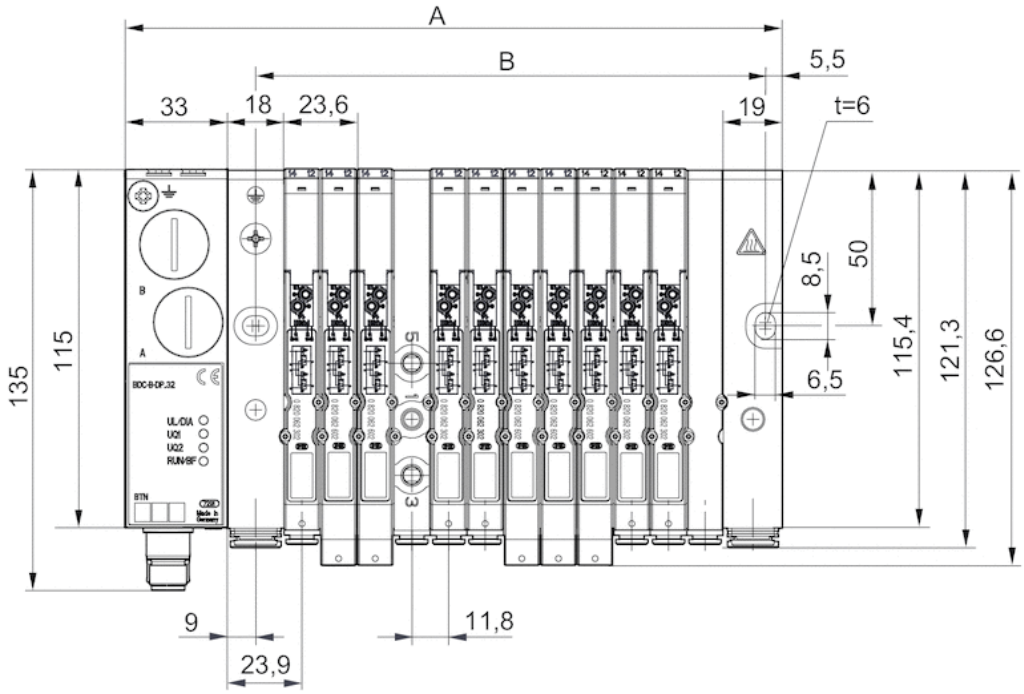

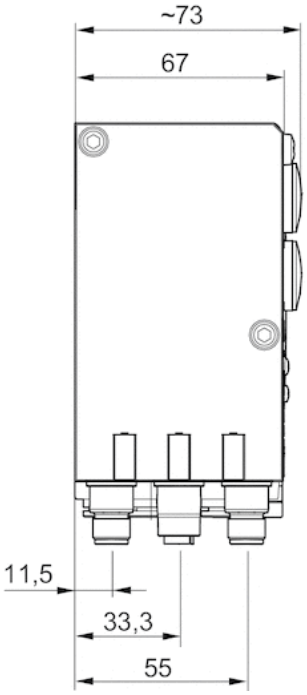

1 = plug-in connection Ø 8 mm or plug-in connection 3/8" (inch)
2 and 4 = plug-in connections Ø 6 mm or thread connections M7(inch)
3 and 5 = plug-in connections Ø 10 mm or plug-in connections 3/8" (inch)
R = collected pilot exhaust, plug-in connection Ø 6 mm or plug-in connection 1/4" (inch)
X = external pilot, plug-in connection Ø 6 mm or plug-in connection 1/4" (inch), connection X plugged with internal pilot control
An example configuration is illustrated. The delivered product may thus deviate from the illustration.

Dimensions

n	A	B
1	93.6	46.1
2	117.2	69.7

n	A	B
3	140.8	93.3
4	164.4	116.9
5	188	140.5
6	211.6	164.1
7	235.2	187.7
8	258.8	211.3
9	282.4	234.9
10	306	258.5
11	329.6	282.1
12	353.2	305.7

n = number of double subplates

Dimensions

Dimensions in mm, Optional fieldbus connection with I/O function (CMS), B-design

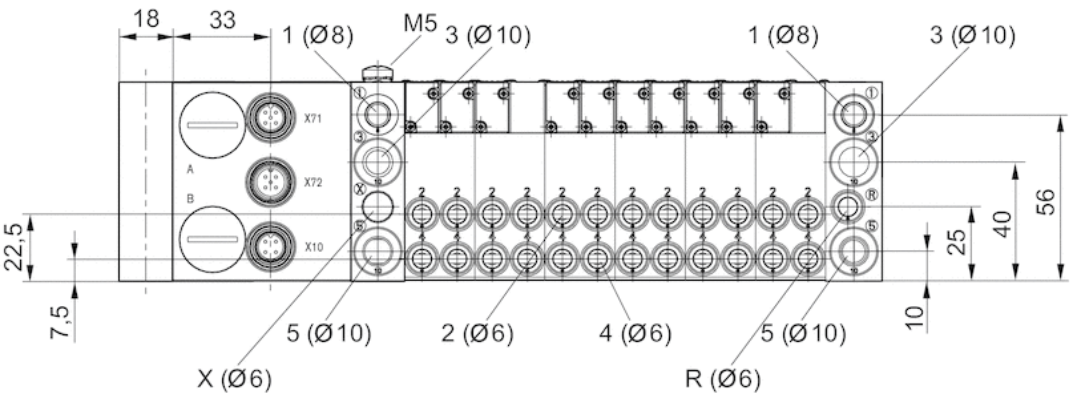

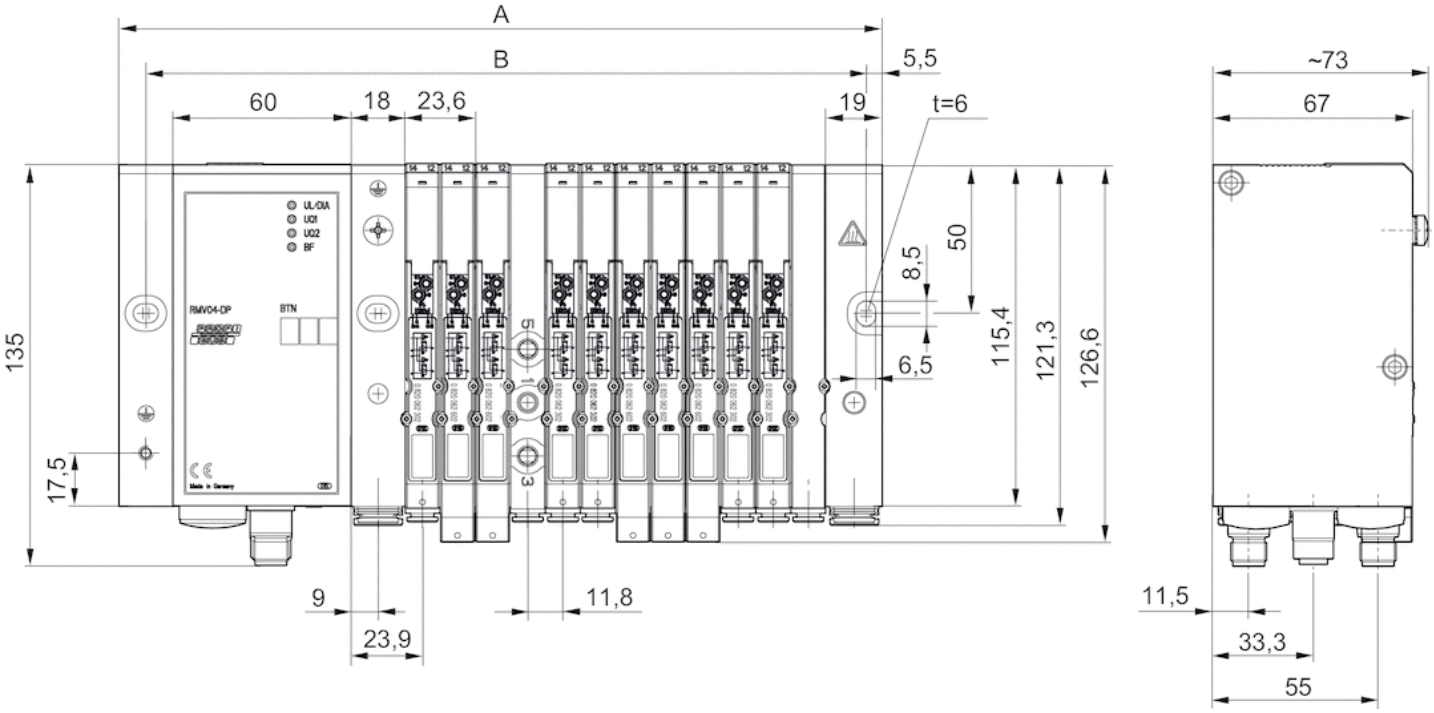

1 = plug-in connection Ø 8 mm or plug-in connection 3/8" (inch)
2 and 4 = plug-in connections Ø 6 mm or thread connections M7(inch)
3 and 5 = plug-in connections Ø 10 mm or plug-in connections 3/8" (inch)
R = collected pilot exhaust, plug-in connection Ø 6 mm or plug-in connection 1/4" (inch)
X = external pilot, plug-in connection Ø 6 mm or plug-in connection 1/4" (inch), connection X plugged with internal pilot control
An example configuration is illustrated. The delivered product may thus deviate from the illustration.

Dimensions

n	A	B
1	138.6	124.1
2	162.2	147.7

n	A	B
3	185.8	171.3
4	209.4	194.9
5	233	218.5
6	256.6	242.1
7	280.2	265.7
8	303.8	289.3
9	327.4	312.9
10	351	336.5
11	374.6	360.1
12	398.2	383.7

n = number of double subplates

Dimensions

Dimensions in mm, Connection with diagnosis (DDL)

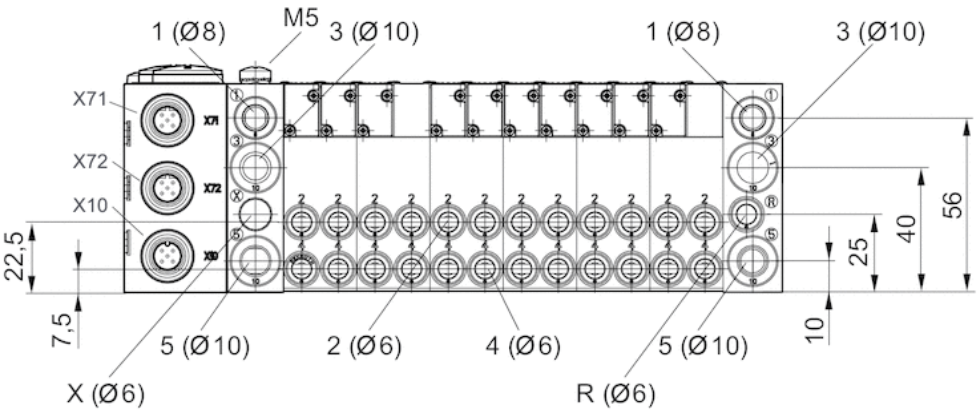

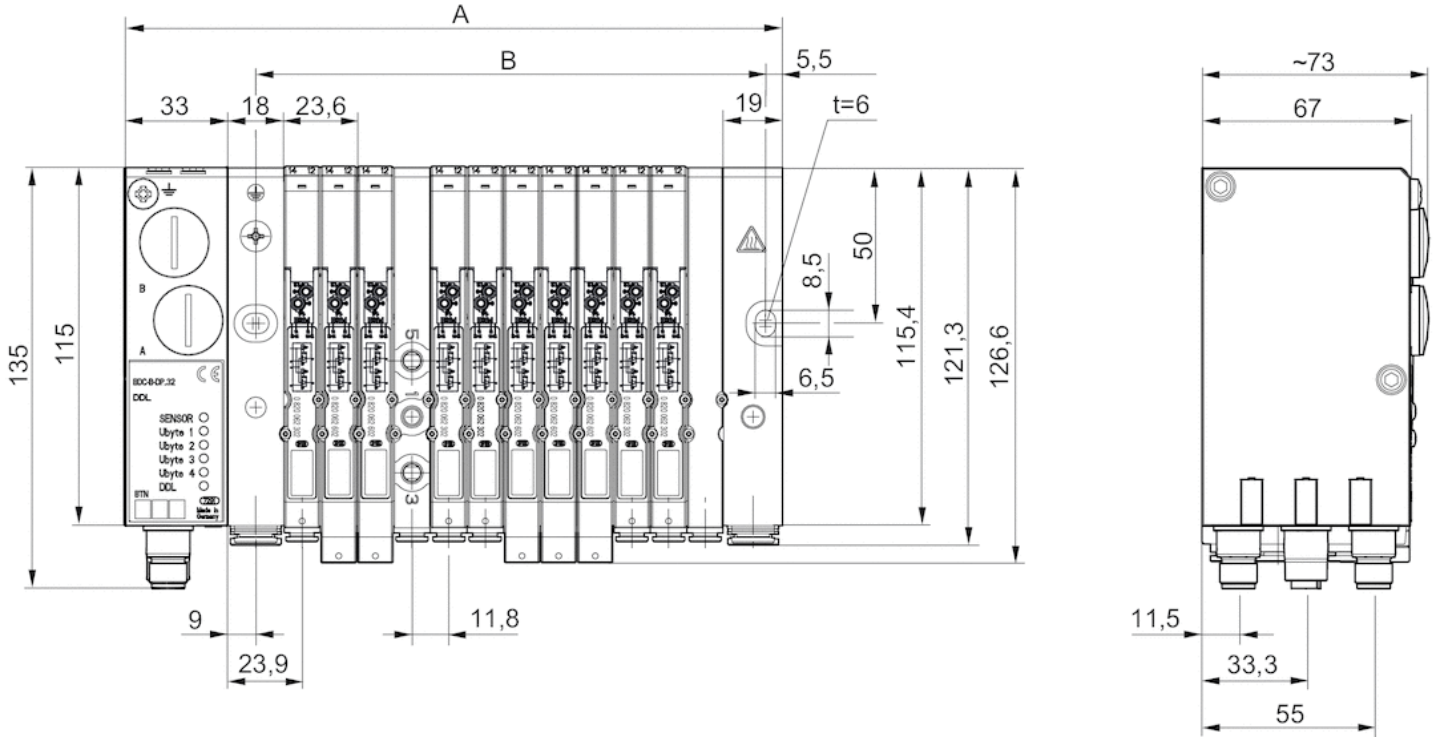

1 = plug-in connection Ø 8 mm or plug-in connection 3/8" (inch)
2 and 4 = plug-in connections Ø 6 mm or thread connections M7(inch)
3 and 5 = plug-in connections Ø 10 mm or plug-in connections 3/8" (inch)
R = collected pilot exhaust, plug-in connection Ø 6 mm or plug-in connection 1/4" (inch)
X = external pilot, plug-in connection Ø 6 mm or plug-in connection 1/4" (inch), connection X plugged with internal pilot control
An example configuration is illustrated. The delivered product may thus deviate from the illustration.

Dimensions

n	A	B
1	93.6	46.1
2	117.2	69.7

n	A	B
3	140.8	93.3
4	164.4	116.9
5	188	140.5
6	211.6	164.1
7	235.2	187.7
8	258.8	211.3
9	282.4	234.9
10	306	258.5
11	329.6	282.1
12	353.2	305.7

n = number of double subplates

Dimensions

Dimensions in mm, Connection with diagnosis, optionally with I/O function (DDL)

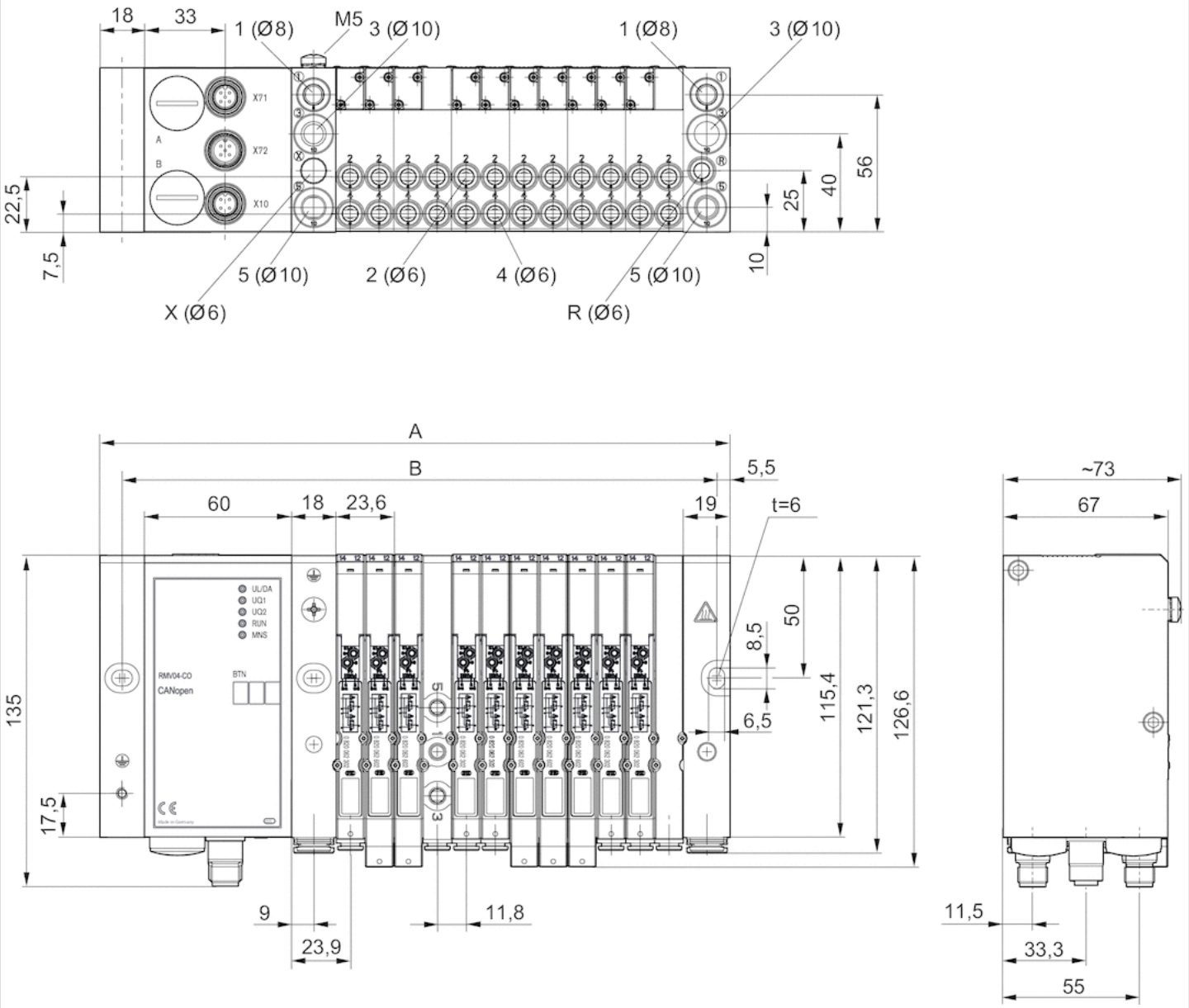

1 = plug-in connection Ø 8 mm or plug-in connection 3/8" (inch)
2 and 4 = plug-in connections Ø 6 mm or thread connections M7(inch)
3 and 5 = plug-in connections Ø 10 mm or plug-in connections 3/8" (inch)
R = collected pilot exhaust, plug-in connection Ø 6 mm or plug-in connection 1/4" (inch)
X = external pilot, plug-in connection Ø 6 mm or plug-in connection 1/4" (inch), connection X plugged with internal pilot control
An example configuration is illustrated. The delivered product may thus deviate from the illustration.

Dimensions

n	A	B
1	138.6	124.1
2	162.2	147.7

n	A	B
3	185.8	171.3
4	209.4	194.9
5	233	218.5
6	256.6	242.1
7	280.2	265.7
8	303.8	289.3
9	327.4	312.9
10	351	336.5
11	374.6	360.1
12	398.2	383.7

n = number of double subplates

Dimensions

Dimensions in mm, 8DI/8DO-AUX

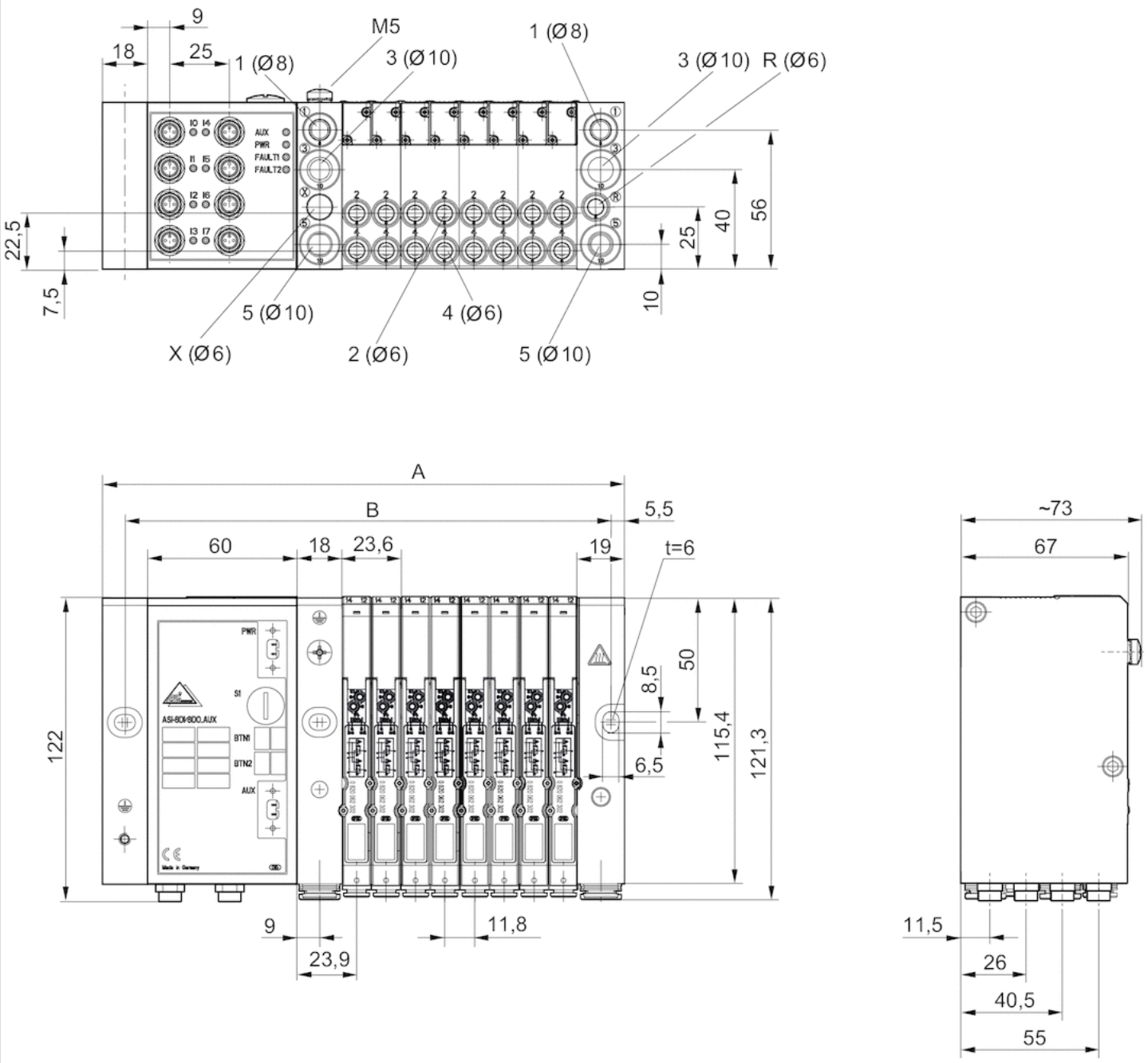

1 = plug-in connection Ø 8 mm or plug-in connection 3/8" (inch)
2 and 4 = plug-in connections Ø 6 mm or thread connections M7(inch)
3 and 5 = plug-in connections Ø 10 mm or plug-in connections 3/8" (inch)
R = collected pilot exhaust, plug-in connection Ø 6 mm or plug-in connection 1/4" (inch)
X = external pilot, plug-in connection Ø 6 mm or plug-in connection 1/4" (inch), connection X plugged with internal pilot control
Max. 4 double subbases possible, max. 8 valves
An example configuration is illustrated. The delivered product may thus deviate from the illustration.

Dimensions

n	A	B
1	138.6	124.1

n	A	B
2	162.2	147.7
3	185.8	171.3
4	209.4	194.9

n = number of double subplates

2x3/2-directional valve, Series HF04

- For series : HF04, LP04, HF04-XF
- 2x3/2
- Qn = 0.406 Cv
- Pilot valve width : 10 mm
- NC/NC NO/NO NC/NO
- Plate connection
- Manual override : with detent
- Pilot : External, Internal

Type	Spool valve, positive overlapping
Activation	Electrically
Pilot	External, Internal
Sealing principle	Soft sealing
Blocking principle	Double base plate principle
Working pressure min./max.	-13 ... 145 psi
Control pressure min./max.	44 ... 116 psi
Ambient temperature min./max.	23 ... 122 °F
Medium temperature min./max.	32 ... 122 °F
Medium	Compressed air
Max. particle size	5 µm
Oil content of compressed air	0 ... 5 mg/m³
Nominal flow Qn	0.406 Cv
Pilot control exhaust	With collective pilot air exhaust
Protection class with connection	IP65
Protective circuit	Z-diode
Reverse polarity protection	Protected against polarity reversal
LED status display	Yellow
Duty cycle	100 %
Typ. switch-on time	13 ms
Typ. switch-off time	20 ms
mounting screws	cross recessed DIN EN ISO 4757-Z0
Mounting screw tightening torque	0.18 ft./lbs.
Weight	0.106 lbs

Technical data

Part No.		MO		Operational voltage	Voltage tolerance
				DC	DC
0820062101			NC/NC	24 V	-10% / +10%
0820062201			NO/NO	24 V	-10% / +10%
0820062301			NC/NO	24 V	-10% / +10%

Part No.	Power consumption
	DC
0820062101	0.55 W
0820062201	0.55 W
0820062301	0.55 W

Nominal flow Qn at 87 psi and Δp = 14.5 psi, MO = Manual override

Technical information

The min. control pressure must be adhered to, since otherwise faulty switching and valve failure may result!
The pressure dew point must be at least 27 °F under ambient and medium temperature and may not exceed 5.4 °F .
The oil content of compressed air must remain constant during the life cycle.
Use only the approved oils from AVENTICS. Further information can be found in the “Technical information” document (available in the MediaCentre).

The pilot type (external/internal) is not implemented in the valve, but in the end plate of the valve system.

Technical information

Material	
Housing	Polyamide
Seals	Acrylonitrile butadiene rubber Polyurethane

Dimensions

Dimensions

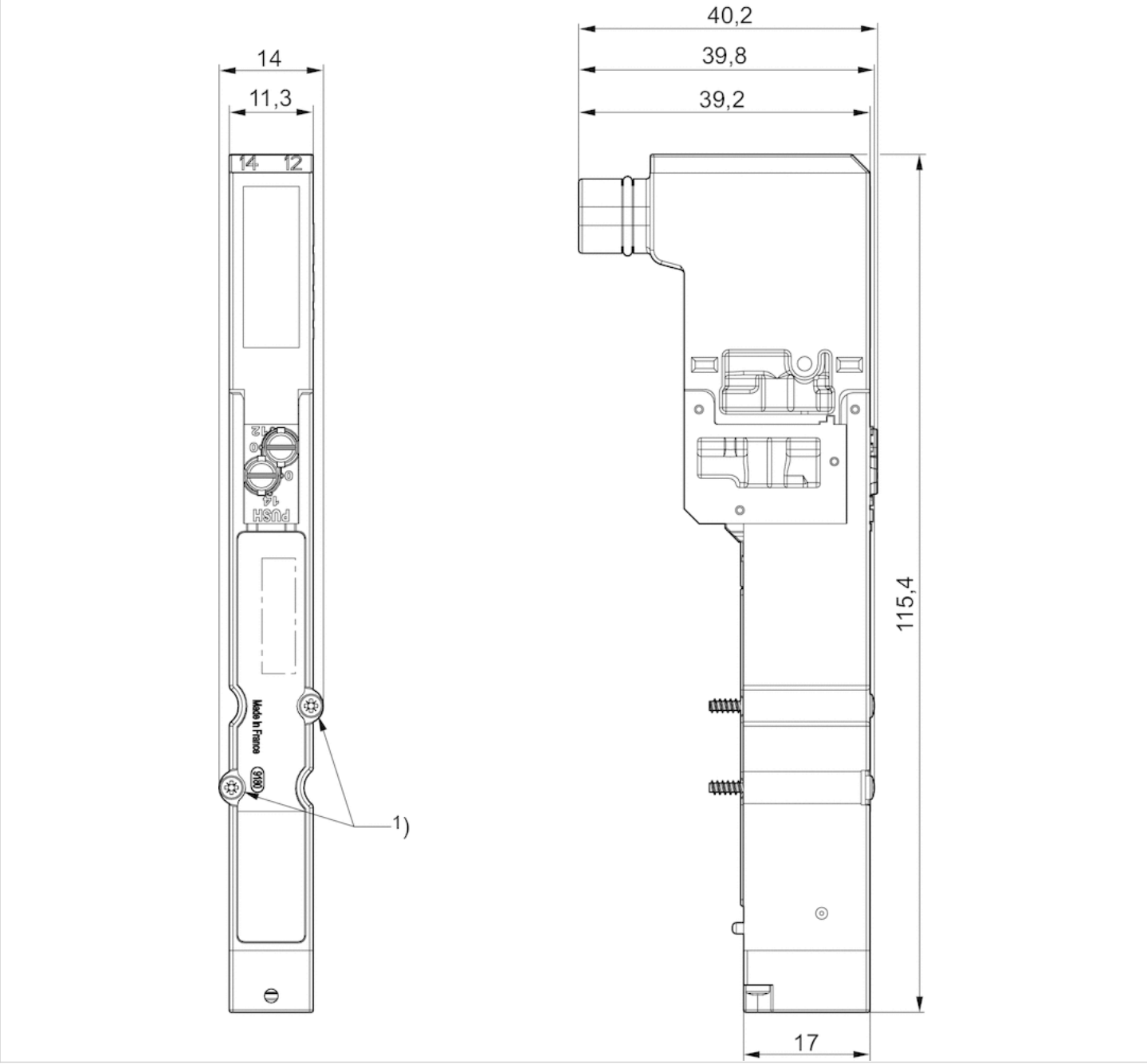

1) Mounting screw: X-slot DIN EN ISO 4757-Z0
tightening torque for mounting screw [Nm]: 0.25

2x3/2-directional valve, Series HF04

- For series : HF04, LP04, HF04-XF
- 2x3/2
- Qn = 0.406 Cv
- Pilot valve width : 10 mm
- NC/NC NO/NO NC/NO
- Plate connection
- Manual override : without detent
- Pilot : External, Internal

Type	Spool valve, positive overlapping
Activation	Electrically
Pilot	External, Internal
Sealing principle	Soft sealing
Blocking principle	Double base plate principle
Working pressure min./max.	-13 ... 145 psi
Control pressure min./max.	44 ... 116 psi
Ambient temperature min./max.	23 ... 122 °F
Medium temperature min./max.	32 ... 122 °F
Medium	Compressed air
Max. particle size	5 µm
Oil content of compressed air	0 ... 5 mg/m³
Nominal flow Qn	0.406 Cv
Protection class with connection	IP65
Protective circuit	Z-diode
Reverse polarity protection	Protected against polarity reversal
LED status display	Yellow
Duty cycle	100 %
Typ. switch-on time	13 ms
Typ. switch-off time	20 ms
mounting screws	cross recessed DIN EN ISO 4757-Z0
Mounting screw tightening torque	0.18 ft./lbs.
Weight	0.106 lbs

Technical data

Part No.		MO		Operational voltage	Voltage tolerance
				DC	DC
0820062102			NC/NC	24 V	-10% / +10%
0820062202			NO/NO	24 V	-10% / +10%
0820062302			NC/NO	24 V	-10% / +10%

Part No.	Power consumption
	DC
0820062102	0.55 W
0820062202	0.55 W
0820062302	0.55 W

Nominal flow Qn at 87 psi and Δp = 14.5 psi, MO = Manual override

Technical information

The min. control pressure must be adhered to, since otherwise faulty switching and valve failure may result!
The pressure dew point must be at least 27 °F under ambient and medium temperature and may not exceed 5.4 °F .
The oil content of compressed air must remain constant during the life cycle.
Use only the approved oils from AVENTICS. Further information can be found in the “Technical information” document (available in the MediaCentre).

The pilot type (external/internal) is not implemented in the valve, but in the end plate of the valve system.

Technical information

Material	
Housing	Polyamide
Seals	Acrylonitrile butadiene rubber Polyurethane

Dimensions

Dimensions

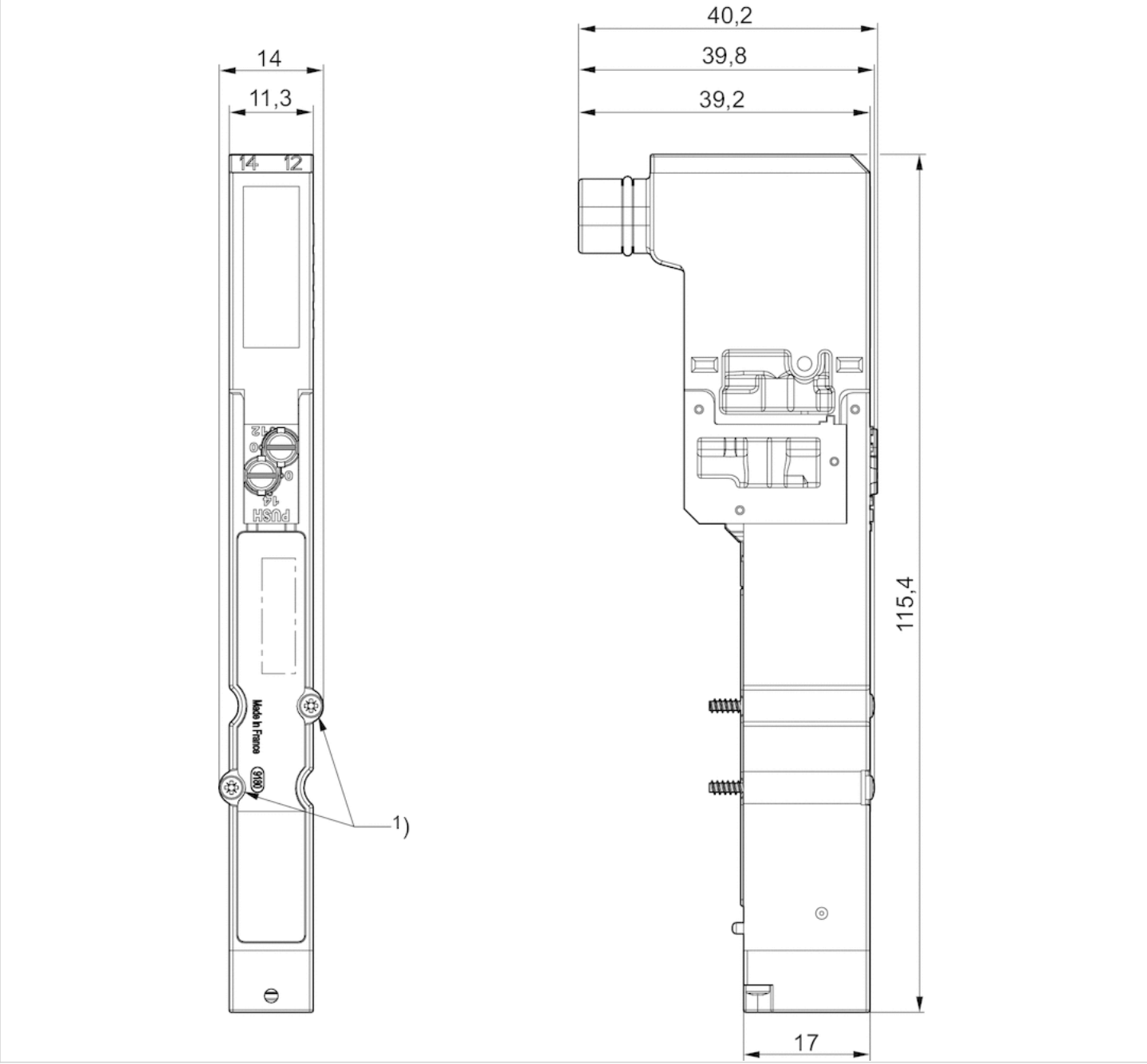

1) Mounting screw: X-slot DIN EN ISO 4757-Z0
tightening torque for mounting screw [Nm]: 0.25

5/2-directional valve, Series HF04

- For series : HF04, LP04, HF04-XF
- 5/2
- Qn = 0.406 Cv
- Pilot valve width : 10 mm
- Plate connection
- Manual override : with detent
- single solenoid double solenoid
- Pilot : External, Internal

Type	Spool valve, positive overlapping
Activation	Electrically
Pilot	External, Internal
Sealing principle	Soft sealing
Blocking principle	Double base plate principle
Working pressure min./max.	-13 ... 145 psi
Control pressure min./max.	44 ... 116 psi
Ambient temperature min./max.	23 ... 122 °F
Medium temperature min./max.	32 ... 122 °F
Medium	Compressed air
Max. particle size	5 µm
Oil content of compressed air	0 ... 5 mg/m³
Nominal flow Qn	0.406 Cv
Protection class with connection	IP65
Protective circuit	Z-diode
Reverse polarity protection	Protected against polarity reversal
LED status display	Yellow
Duty cycle	100 %
mounting screws	cross recessed DIN EN ISO 4757-Z0
Mounting screw tightening torque	0.18 ft./lbs.
Weight	0.106 lbs

Technical data

Part No.		MO	Operational voltage	Voltage tolerance
			DC	DC
0820062051			24 V	-10% / +10%
0820062001			24 V	-10% / +10%
0820062501			24 V	-10% / +10%

Part No.	Power consumption	Typ. switch-on time	Typ. switch-off time
	DC		
0820062051	0.55 W	9 ms	28 ms
0820062001	0.55 W	16 ms	18 ms
0820062501	0.55 W	7 ms	8 ms

Nominal flow Qn at 87 psi and Δp = 14.5 psi, MO = Manual override

Technical information

The min. control pressure must be adhered to, since otherwise faulty switching and valve failure may result!
The pressure dew point must be at least 27 °F under ambient and medium temperature and may not exceed 5.4 °F .
The oil content of compressed air must remain constant during the life cycle.
Use only the approved oils from AVENTICS. Further information can be found in the “Technical information” document (available in the MediaCentre).

The pilot type (external/internal) is not implemented in the valve, but in the end plate of the valve system.

Technical information

Material	
Housing	Polyamide
Seals	Acrylonitrile butadiene rubber Polyurethane

Dimensions

Dimensions

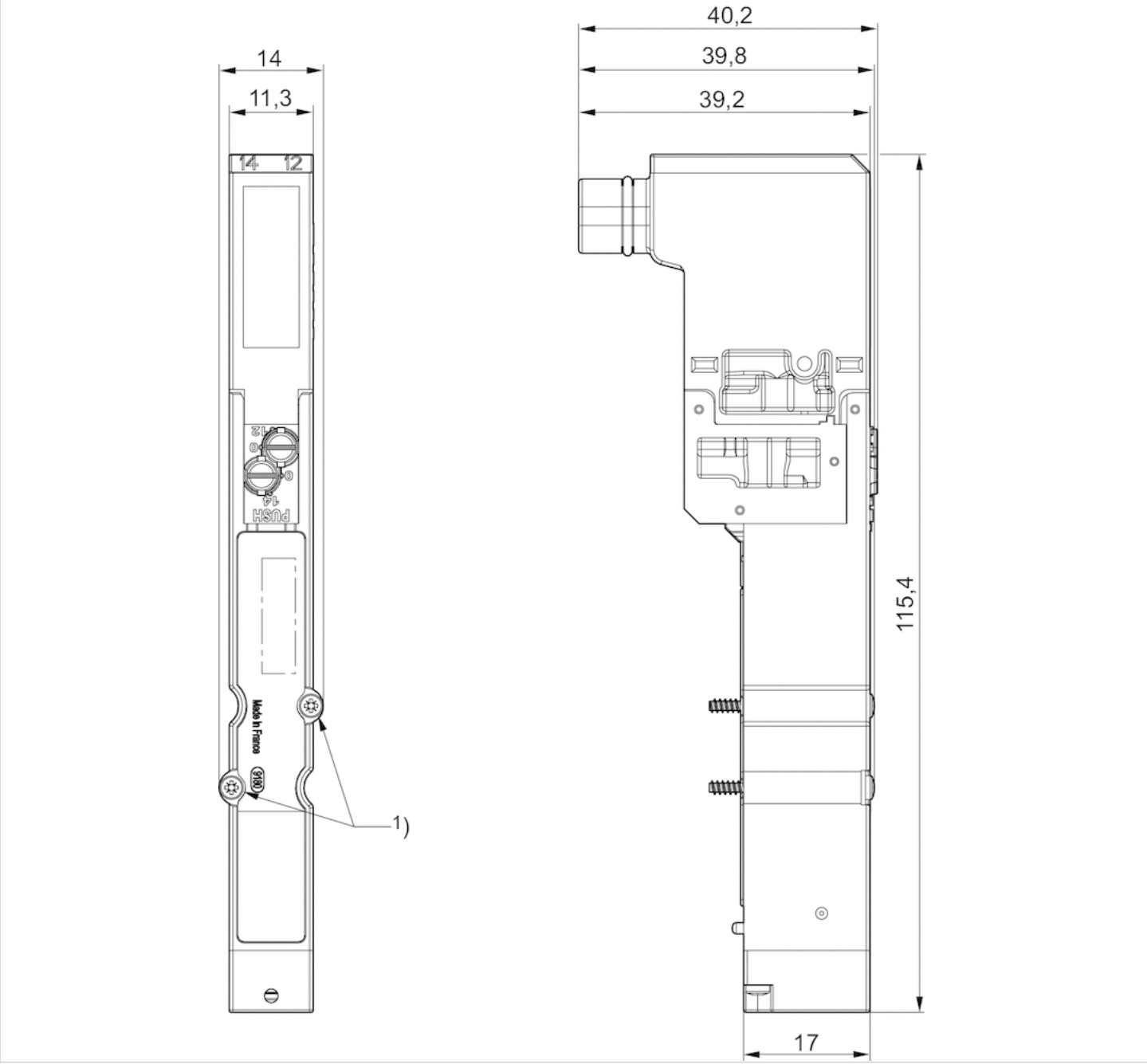

1) Mounting screw: X-slot DIN EN ISO 4757-Z0
tightening torque for mounting screw [Nm]: 0.25

5/2-directional valve, Series HF04

- For series : HF04, LP04, HF04-XF
- 5/2
- Qn = 0.406 Cv
- Pilot valve width : 10 mm
- Plate connection
- Manual override : without detent
- single solenoid double solenoid
- Pilot : External, Internal

Type	Spool valve, positive overlapping
Activation	Electrically
Pilot	External, Internal
Sealing principle	Soft sealing
Blocking principle	Double base plate principle
Working pressure min./max.	-13 ... 145 psi
Control pressure min./max.	44 ... 116 psi
Ambient temperature min./max.	23 ... 122 °F
Medium temperature min./max.	32 ... 122 °F
Medium	Compressed air
Max. particle size	5 µm
Oil content of compressed air	0 ... 5 mg/m³
Nominal flow Qn	0.406 Cv
Protection class with connection	IP65
Protective circuit	Z-diode
Reverse polarity protection	Protected against polarity reversal
LED status display	Yellow
Duty cycle	100 %
mounting screws	cross recessed DIN EN ISO 4757-Z0
Mounting screw tightening torque	0.18 ft./lbs.
Weight	0.106 lbs

Technical data

Part No.		MO	Operational voltage	Voltage tolerance
			DC	DC
0820062052			24 V	-10% / +10%
0820062002			24 V	-10% / +10%
0820062502			24 V	-10% / +10%

Part No.	Power consumption	Typ. switch-on time	Typ. switch-off time
	DC		
0820062052	0.55 W	9 ms	28 ms
0820062002	0.55 W	16 ms	18 ms
0820062502	0.55 W	7 ms	8 ms

Nominal flow Qn at 87 psi and Δp = 14.5 psi, MO = Manual override

Technical information

The min. control pressure must be adhered to, since otherwise faulty switching and valve failure may result!
The pressure dew point must be at least 27 °F under ambient and medium temperature and may not exceed 5.4 °F .
The oil content of compressed air must remain constant during the life cycle.
Use only the approved oils from AVENTICS. Further information can be found in the “Technical information” document (available in the MediaCentre).

The pilot type (external/internal) is not implemented in the valve, but in the end plate of the valve system.

Technical information

Material	
Housing	Polyamide
Seals	Acrylonitrile butadiene rubber Polyurethane

Dimensions

Dimensions

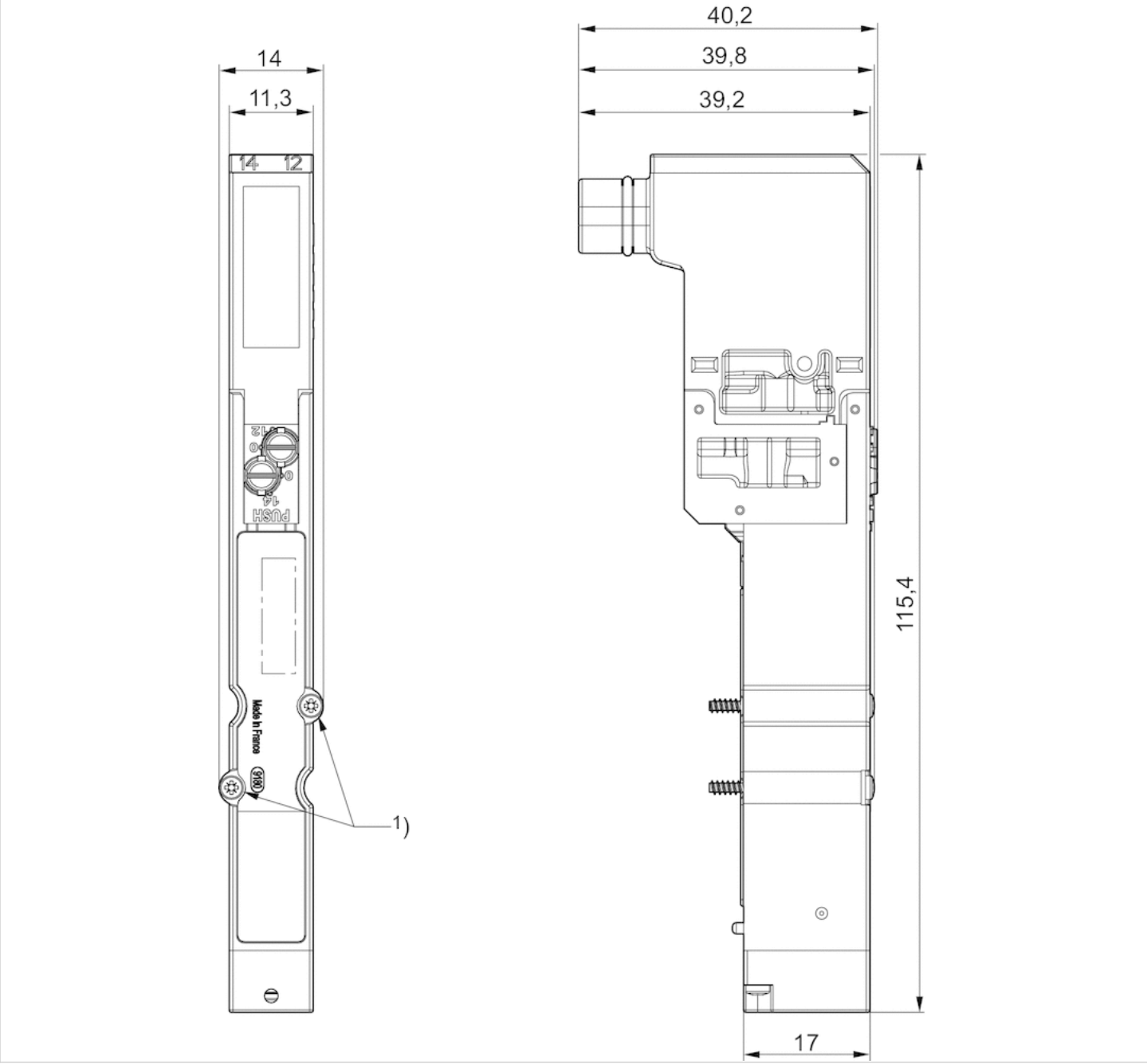

1) Mounting screw: X-slot DIN EN ISO 4757-Z0
tightening torque for mounting screw [Nm]: 0.25

5/3-directional valve, Series HF04

- For series : HF04, LP04, HF04-XF
- 5/3
- Qn = 0.406 Cv
- Pilot valve width : 10 mm
- closed center
- Plate connection
- Manual override : with detent
- Pilot : External, Internal

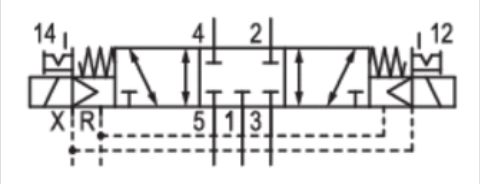

Type	Spool valve, positive overlapping
Activation	Electrically
Pilot	External, Internal
Sealing principle	Soft sealing
Blocking principle	Double base plate principle
Working pressure min./max.	-13 ... 145 psi
Control pressure min./max.	44 ... 116 psi
Ambient temperature min./max.	23 ... 122 °F
Medium temperature min./max.	32 ... 122 °F
Medium	Compressed air
Max. particle size	5 µm
Oil content of compressed air	0 ... 5 mg/m³
Nominal flow Qn	0.406 Cv
Protection class with connection	IP65
Protective circuit	Z-diode
Reverse polarity protection	Protected against polarity reversal
LED status display	Yellow
Duty cycle	100 %
Typ. switch-on time	8 ms
Typ. switch-off time	10 ms
mounting screws	cross recessed DIN EN ISO 4757-Z0
Mounting screw tightening torque	0.18 ft./lbs.
Weight	0.106 lbs

Technical data

Part No.	MO		Operational voltage	Voltage tolerance
			DC	DC
0820062601		closed center	24 V	-10% / +10%

Part No.	Power consumption
	DC
0820062601	0.55 W

Nominal flow Qn at 87 psi and Δp = 14.5 psi, MO = Manual override

Technical information

The min. control pressure must be adhered to, since otherwise faulty switching and valve failure may result!
The pressure dew point must be at least 27 °F under ambient and medium temperature and may not exceed 5.4 °F .
The oil content of compressed air must remain constant during the life cycle.
Use only the approved oils from AVENTICS. Further information can be found in the “Technical information” document (available in the MediaCentre).

The pilot type (external/internal) is not implemented in the valve, but in the end plate of the valve system.

Technical information

Material	
Housing	Polyamide
Seals	Acrylonitrile butadiene rubber Polyurethane

Dimensions

Dimensions

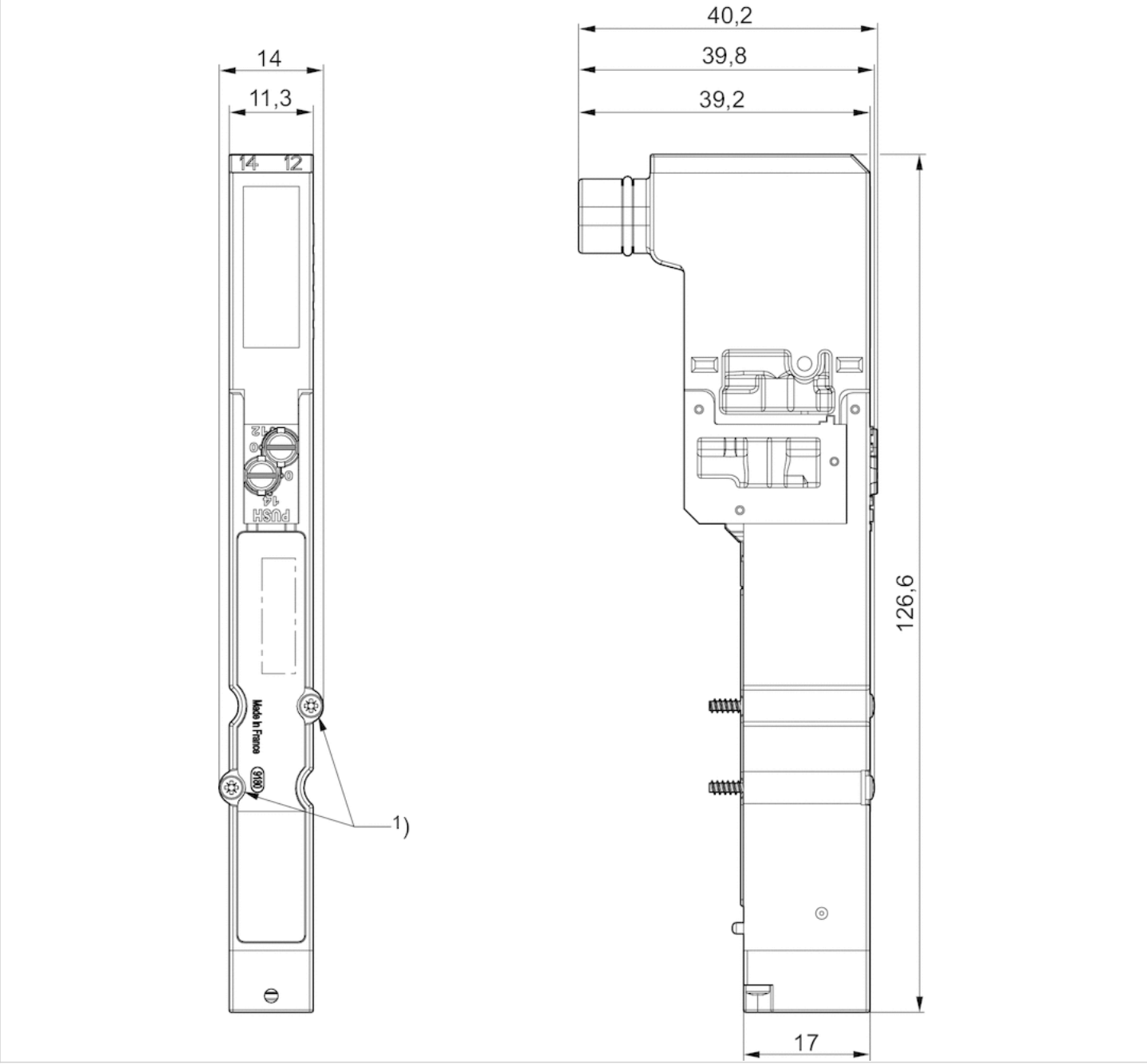

1) Mounting screw: X-slot DIN EN ISO 4757-Z0
tightening torque for mounting screw [Nm]: 0.25

5/3-directional valve, Series HF04

- For series : HF04, LP04, HF04-XF
- 5/3
- Qn = 0.406 Cv
- Pilot valve width : 10 mm
- closed center
- Plate connection
- Manual override : without detent
- Pilot : External, Internal

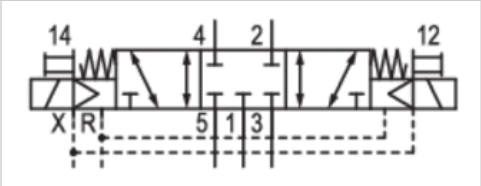

Type	Spool valve, positive overlapping
Activation	Electrically
Pilot	External, Internal
Sealing principle	Soft sealing
Blocking principle	Double base plate principle
Working pressure min./max.	-13 ... 145 psi
Control pressure min./max.	44 ... 116 psi
Ambient temperature min./max.	23 ... 122 °F
Medium temperature min./max.	32 ... 122 °F
Medium	Compressed air
Max. particle size	5 µm
Oil content of compressed air	0 ... 5 mg/m³
Nominal flow Qn	0.406 Cv
Protection class with connection	IP65
Protective circuit	Z-diode
Reverse polarity protection	Protected against polarity reversal
LED status display	Yellow
Duty cycle	100 %
Typ. switch-on time	8 ms
Typ. switch-off time	10 ms
mounting screws	cross recessed DIN EN ISO 4757-Z0
Mounting screw tightening torque	0.18 ft./lbs.
Weight	0.106 lbs

Technical data

Part No.	MO		Operational voltage	Voltage tolerance
			DC	DC
0820062602		closed center	24 V	-10% / +10%

Part No.	Power consumption
	DC
0820062602	0.55 W

Nominal flow Qn at 87 psi and Δp = 14.5 psi, MO = Manual override

Technical information

The min. control pressure must be adhered to, since otherwise faulty switching and valve failure may result!
The pressure dew point must be at least 27 °F under ambient and medium temperature and may not exceed 5.4 °F .
The oil content of compressed air must remain constant during the life cycle.
Use only the approved oils from AVENTICS. Further information can be found in the “Technical information” document (available in the MediaCentre).

The pilot type (external/internal) is not implemented in the valve, but in the end plate of the valve system.

Technical information

Material	
Housing	Polyamide
Seals	Acrylonitrile butadiene rubber Polyurethane

Dimensions

Dimensions

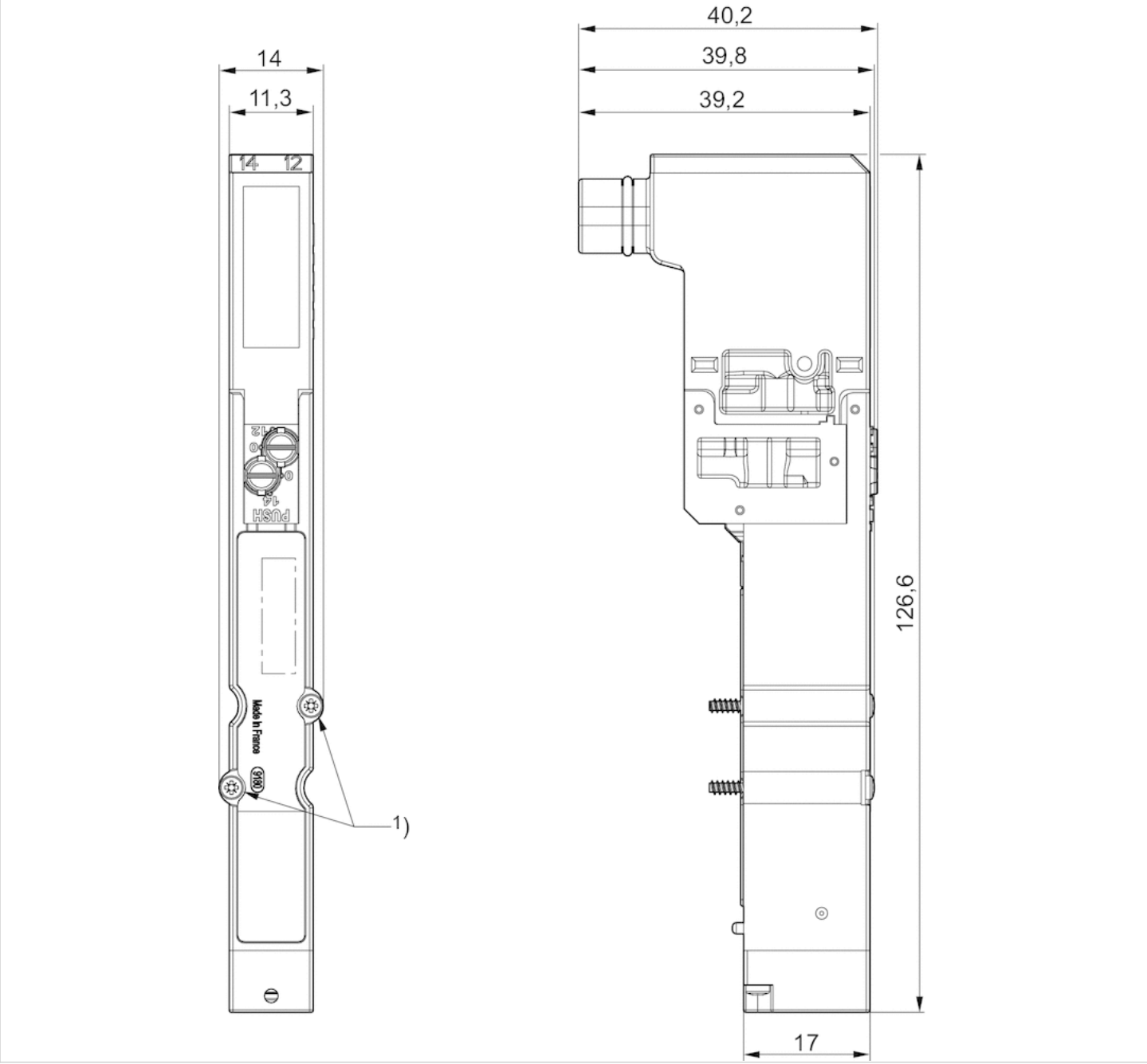

1) Mounting screw: X-slot DIN EN ISO 4757-Z0
tightening torque for mounting screw [Nm]: 0.25

Series BDC

- B-design
- Bus coupler with driver
- Fieldbus protocol EtherCAT PROFIBUS DP CANopen CANopen sb DeviceNet sercos III

Version	Bus coupler with driver
Ambient temperature min./max.	32 ... 122 °F
Operational voltage electronics	24 V DC
Electronics voltage tolerance	-15% / +20%
Power consumption electronics	0.05 A
Operating voltage, actuators	24 V DC
Total current for actuators	3 A
Protection class	IP65
Number of solenoid coils max.	32
Max. power consumption per coil	0.1 mA
Generic emission standard in accordance with norm	EN 61000-6-4
Generic immunity standard in accordance with norm	IEC 61000-6-2
Weight	0.639 lbs

Technical data

Part No.	Fieldbus protocol	Port
		1
R412009573	EtherCAT	Socket (female), M12x1, 5-pin, D-coded
R412008537	PROFIBUS DP	Plug (male), M12x1, 5-pin, B-coded
R412008538	CANopen	Plug (male), M12x1, 5-pin, A-coded
R412008990	CANopen sb	Plug (male), M12x1, 5-pin, A-coded
R412008539	DeviceNet	Plug (male), M12x1, 5-pin, A-coded
R412009516	sercos III	Socket (female), M12x1, 5-pin, D-coded

Part No.	Port	power supply
	2	
R412009573	Socket (female), M12x1, 5-pin, D-coded	Plug (male), M12, 4-pin, A-coded
R412008537	Socket (female), M12x1, 5-pin, B-coded	Plug (male), M12, 4-pin, A-coded
R412008538	Socket (female), M12x1, 5-pin, A-coded	Plug (male), M12, 4-pin, A-coded
R412008990	Socket (female), M12x1, 5-pin, A-coded	Plug (male), M12, 4-pin, A-coded
R412008539	Socket (female), M12x1, 5-pin, A-coded	Plug (male), M12, 4-pin, A-coded
R412009516	Socket (female), M12x1, 5-pin, D-coded	Plug (male), M12, 4-pin, A-coded

Scope of delivery incl. 2 screws and seal, The following operating instructions can be found in the Media Center for:↩PROFIBUS DP: R412009414↩CANopen /-sb: R412009415↩DeviceNet: R412009416↩EtherCAT: R412012792↩sercos III: R412012610

Technical information

Max. number of valves: 16 double solenoid or 32 single solenoid
You will find assignment schemes for the product in the operating instructions, or contact the nearest AVENTICS sales office.
Caution: A reduced temperature range in accordance with the operating instructions may need to be considered in ATEX applications.

Technical information

Material	
Housing	Die-cast aluminum

Dimensions

Dimensions

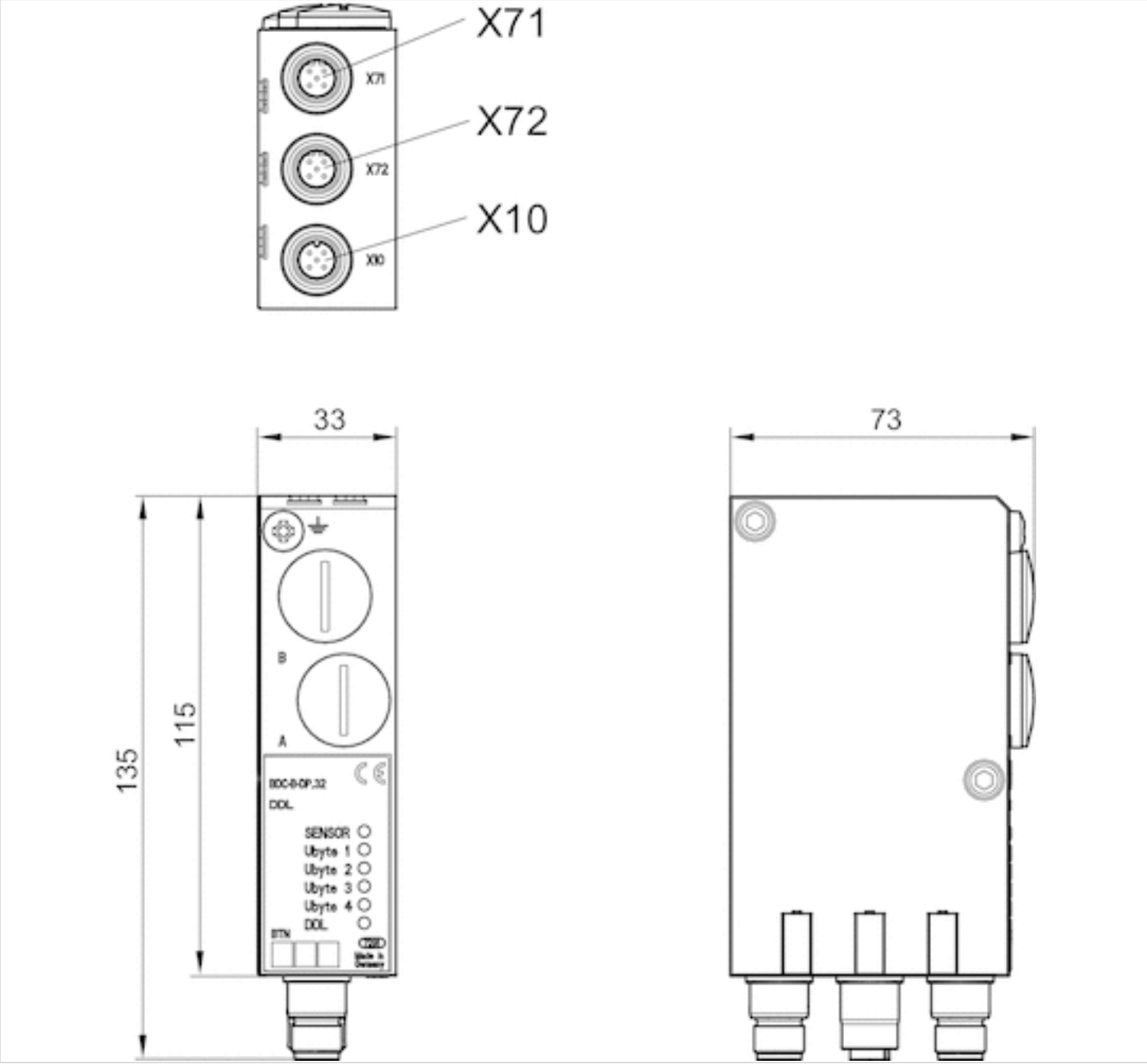

X71 = Bus IN
X72 = Bus OUT
X10 = power supply

Series AS-i, B-design

- B-design
- Bus coupler with driver
- Yellow AS-i flat cable
- Fieldbus protocol AS-i

Version	Bus coupler with driver
Ambient temperature min./max.	32 ... 122 °F
Operating voltage, actuators	24 V DC
Protection class	IP65
Max. power consumption per coil	0.03 mA
Port Valve system	Socket, 2.0 mm strip, 2x13-pin
ID Code / ID2 Code	F / E
I/O Code	8
Generic emission standard in accordance with norm	EN 50295
Generic immunity standard in accordance with norm	EN 50295
Weight	0.309 lbs

The delivered product may vary from that in the illustration.

Technical data

Part No.	Fieldbus protocol	Port	power supply
		1	
R412003488	AS-i	Yellow AS-i flat cable	Black AS-i flat cable
R412006761	AS-i	Yellow AS-i flat cable	Black AS-i flat cable

Part No.	Number of outputs for valve coils	Power consumption electronics	Fig.
R412003488	4	0.05 A	Fig. 1
R412006761	8	0.08 A	Fig. 2

Scope of delivery incl. seal and mounting screws, The following operating instructions can be found in the Media Center for:↩AS-i: R499050017

Technical information

Caution: A reduced temperature range in accordance with the operating instructions may need to be considered in ATEX applications. You will find assignment schemes for the product in the operating instructions, or contact the nearest AVENTICS sales office.

Technical information

Material	
Housing	Aluminum Die-cast aluminum

Dimensions

Fig. 1

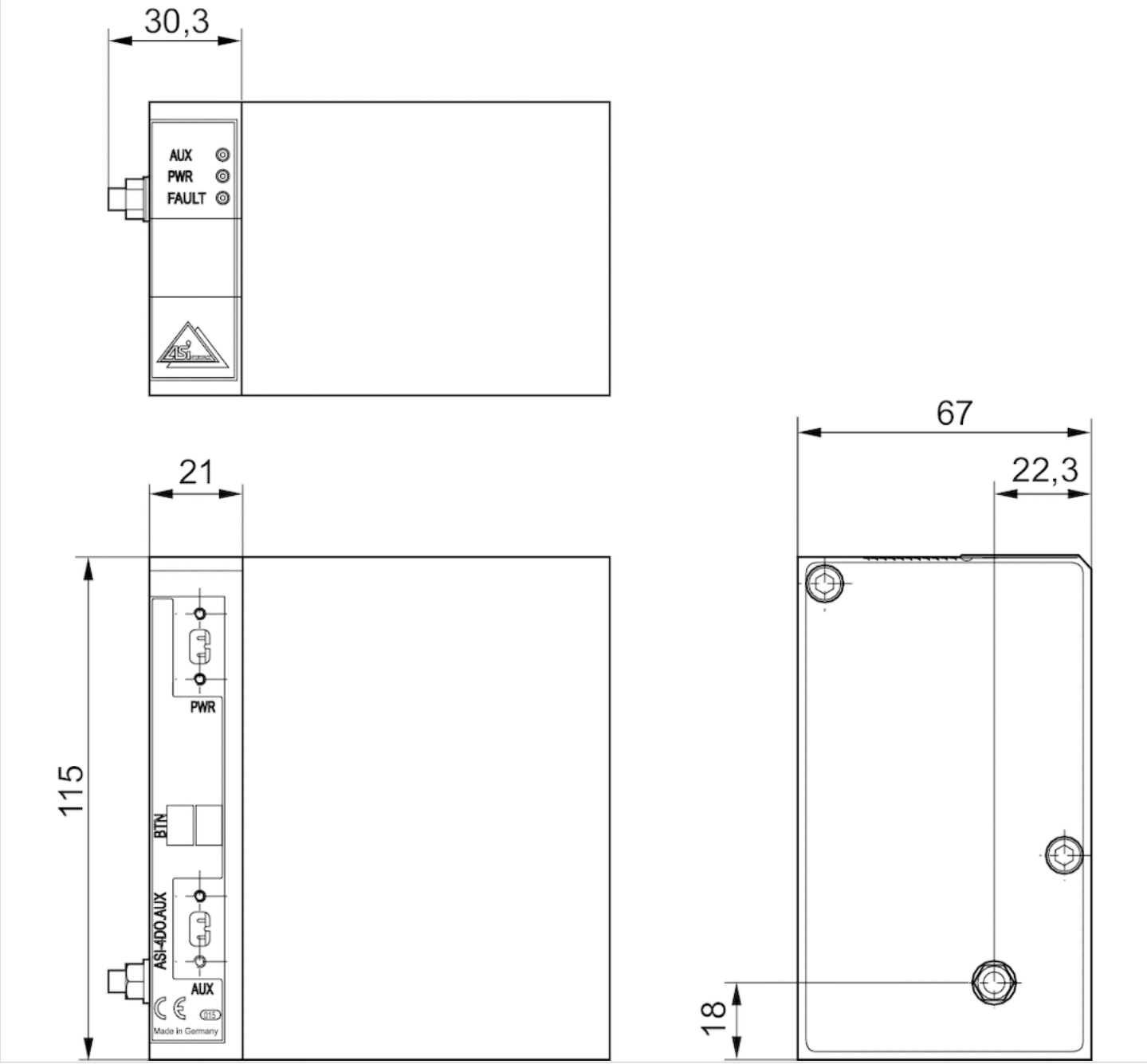

AS-i, 4DO-AUX

Fig. 2

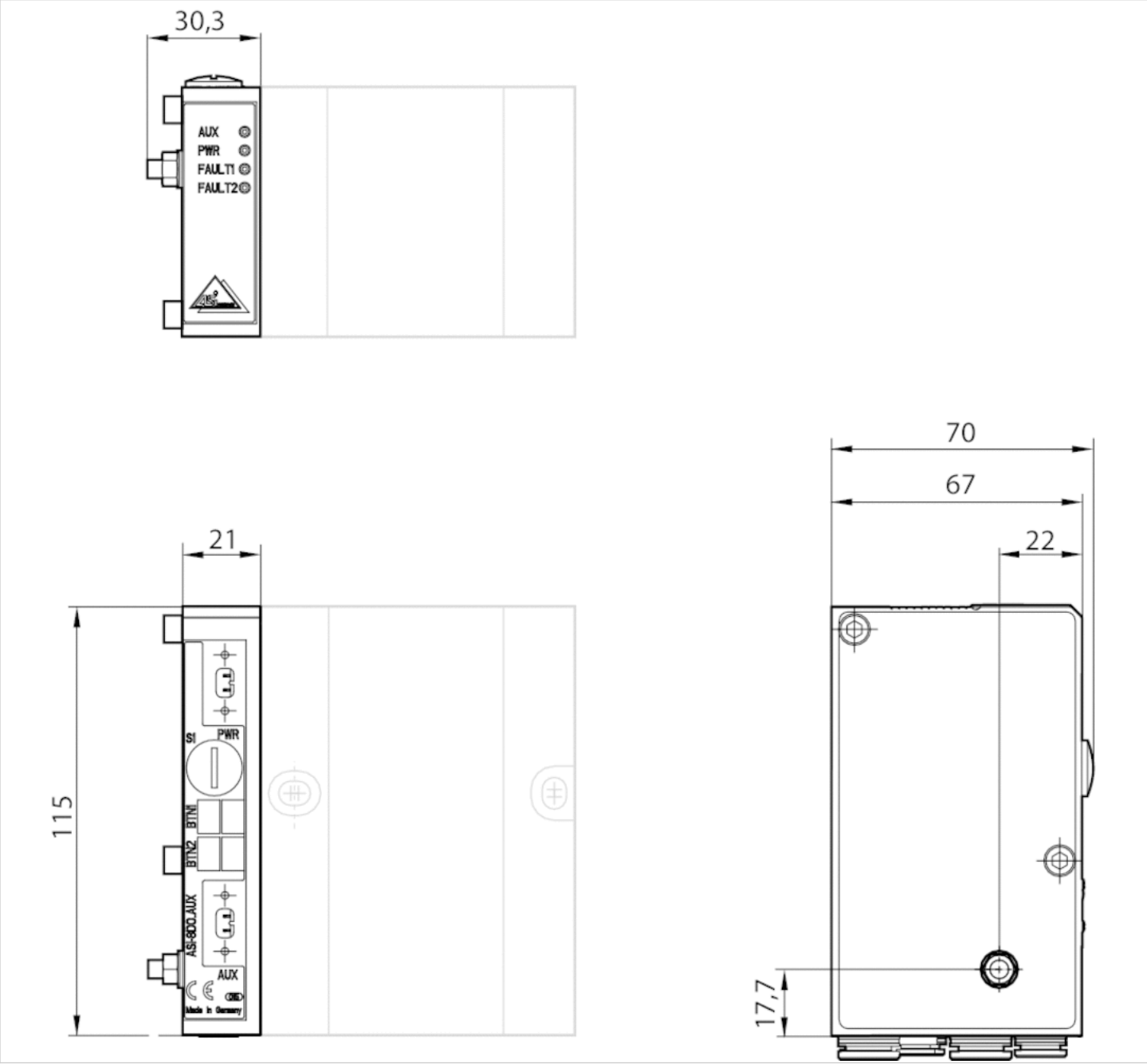

AS-i, 8DO-AUX

Series AS-i, B-design

- B-design
- Bus coupler with driver
- Yellow AS-i flat cable
- Fieldbus protocol AS i with inputs

Version	Bus coupler with driver
Ambient temperature min./max.	32 ... 122 °F
Operating voltage, actuators	24 V DC
Protection class	IP65
Max. power consumption per coil	0.03 mA
Port Valve system	Socket, 2.0 mm strip, 2x13-pin
ID Code / ID2 Code	F / E
I/O connection	input or output, Socket, M8
I/O Code	7
Generic emission standard in accordance with norm	EN 50295
Generic immunity standard in accordance with norm	EN 50295

The delivered product may vary from that in the illustration.

Technical data

Part No.	Fieldbus protocol	Port	power supply	Number of inputs
		1		
R412003486	AS i with inputs	Yellow AS-i flat cable	Black AS-i flat cable	8
R412003487	AS i with inputs	Yellow AS-i flat cable	Black AS-i flat cable	4

Part No.	Number of outputs for valve coils	I/O connection	I/O connection
			Number
R412003486	8	input or output, Socket, M8	8
R412003487	4	input or output, Socket, M8	4

Part No.	Power consumption electronics	Fig.
R412003486	0.1 A	Fig. 2
R412003487	0.05 A	Fig. 1

Scope of delivery incl. 2 tie rod extensions and seal, The following operating instructions can be found in the Media Center for:↩AS-i: R499050017

Technical information

Caution: A reduced temperature range in accordance with the operating instructions may need to be considered in ATEX applications. You will find assignment schemes for the product in the operating instructions, or contact the nearest AVENTICS sales office.

Technical information

Material	
Housing	Aluminum

Dimensions

Fig. 1

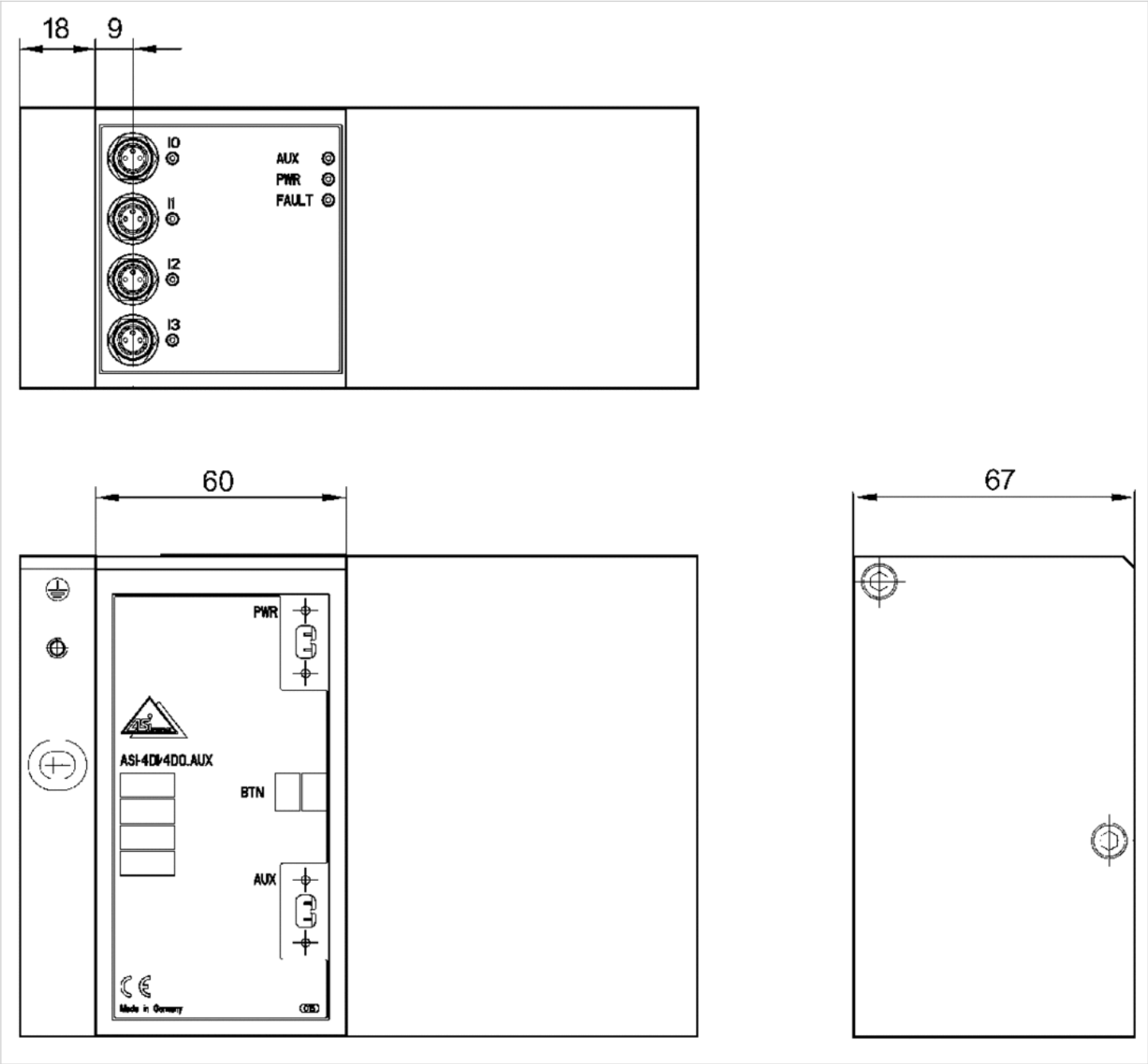

4DI/4DO-AUX

Fig. 2

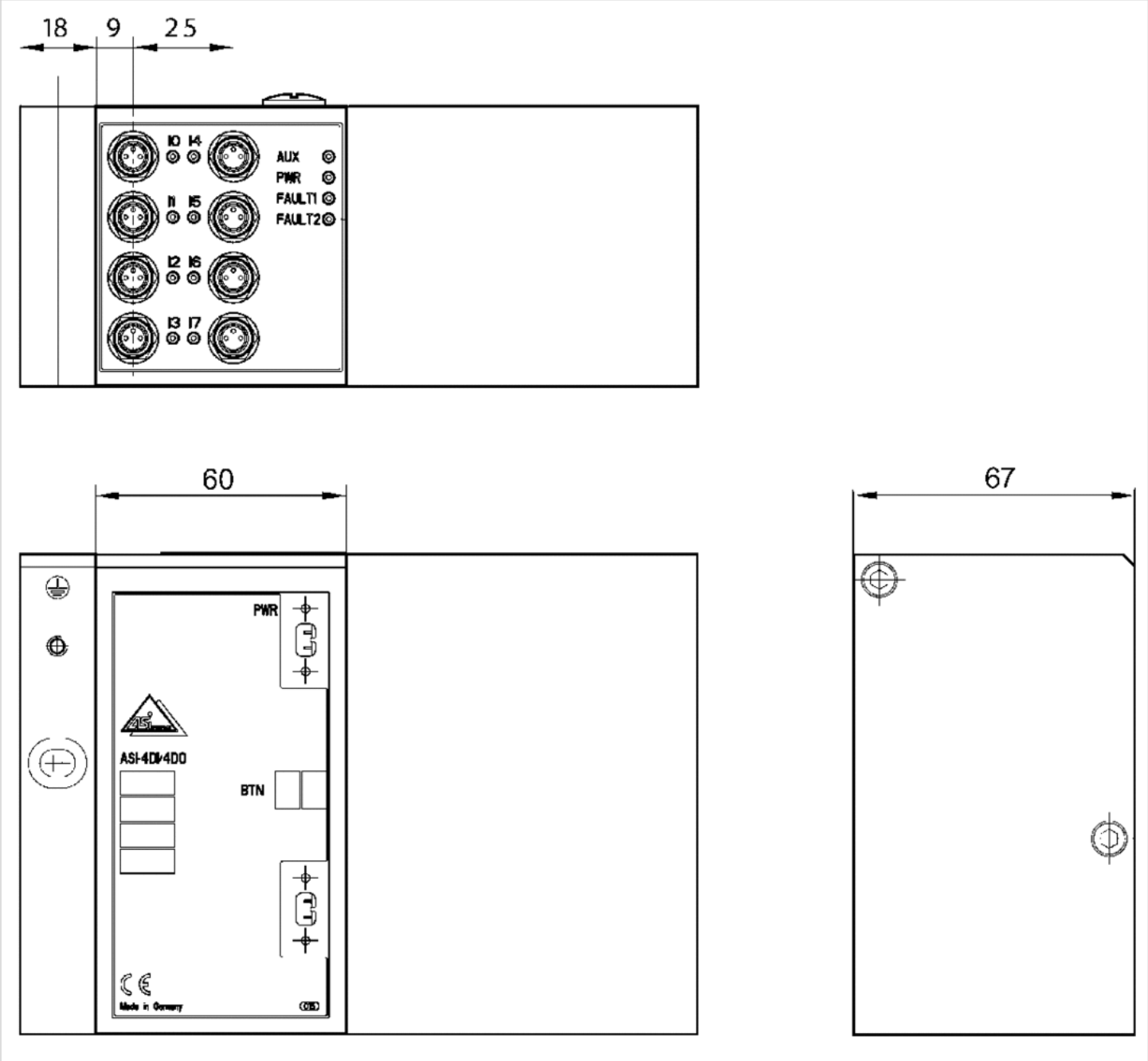

8DI/8DO-AUX

Series AES

- Fieldbus connection with I/O functionality
- D-design
- Bus coupler
- Fieldbus protocol PROFIBUS DP CANopen DeviceNet EtherNET/IP PROFINET IO EtherCAT POWERLINK

Version	Bus coupler
Ambient temperature min./max.	14 ... 140 °F
Operational voltage electronics	24 V DC
Electronics voltage tolerance	-25% / +25%
Power consumption electronics	0.1 A
Operating voltage, actuators	24 V DC
Total current for actuators	4 A
Protection class	IP65
Cycle time at 256 bits	1 ms
Number of solenoid coils max.	128
Number of valve positions max.	64
Logic/actuator voltage	Galvanically isolated
Diagnosis	Short circuit Undervoltage
I/O module extension max.	10
Generic emission standard in accordance with norm	EN 61000-6-4
Generic immunity standard in accordance with norm	EN 61000-6-2
Weight	See table below

Technical data

Part No.	Fieldbus protocol	Port
		1
R412018218	PROFIBUS DP	Plug (male), M12, 5-pin, B-coded
R412018220	CANopen	Plug (male), M12, 5-pin, A-coded
R412018221	DeviceNet	Plug (male), M12, 5-pin, A-coded
R412018222	EtherNET/IP	Socket (female), M12, 4-pin, D-coded
R412018223	PROFINET IO	Socket (female), M12, 4-pin, D-coded
R412018225	EtherCAT	Socket (female), M12, 4-pin, D-coded
R412018226	POWERLINK	Socket (female), M12, 4-pin, D-coded

Part No.	Port	power supply
	2	
R412018218	Socket (female), M12, 5-pin, B-coded	Plug (male), M12, 4-pin, A-coded
R412018220	Socket (female), M12, 5-pin, A-coded	Plug (male), M12, 4-pin, A-coded
R412018221	Socket (female), M12, 5-pin, A-coded	Plug (male), M12, 4-pin, A-coded
R412018222	Socket (female), M12, 4-pin, D-coded	Plug (male), M12, 4-pin, A-coded
R412018223	Socket (female), M12, 4-pin, D-coded	Plug (male), M12, 4-pin, A-coded
R412018225	Socket (female), M12, 4-pin, D-coded	Plug (male), M12, 4-pin, A-coded
R412018226	Socket (female), M12, 4-pin, D-coded	Plug (male), M12, 4-pin, A-coded

Part No.	Weight	
R412018218	0.353 lbs	-
R412018220	0.353 lbs	-
R412018221	0.353 lbs	-
R412018222	0.386 lbs	-
R412018223	0.386 lbs	1)
R412018225	0.386 lbs	1)
R412018226	0.386 lbs	-

Scope of delivery: Incl. mounting screws 3x

1) Do not use in new constructions!

Technical information

You will find assignment schemes for the product in the operating instructions, or contact the nearest AVENTICS sales office.
Voltage and short-circuit monitoring per LED.
During cyclical data transfer, the bus coupler can send 512 bits of input data to the controller and receive 512 bits of output data from the controller.

Technical information

Material	
Housing	Polyamide fiber-glass reinforced

Dimensions

Dimensions

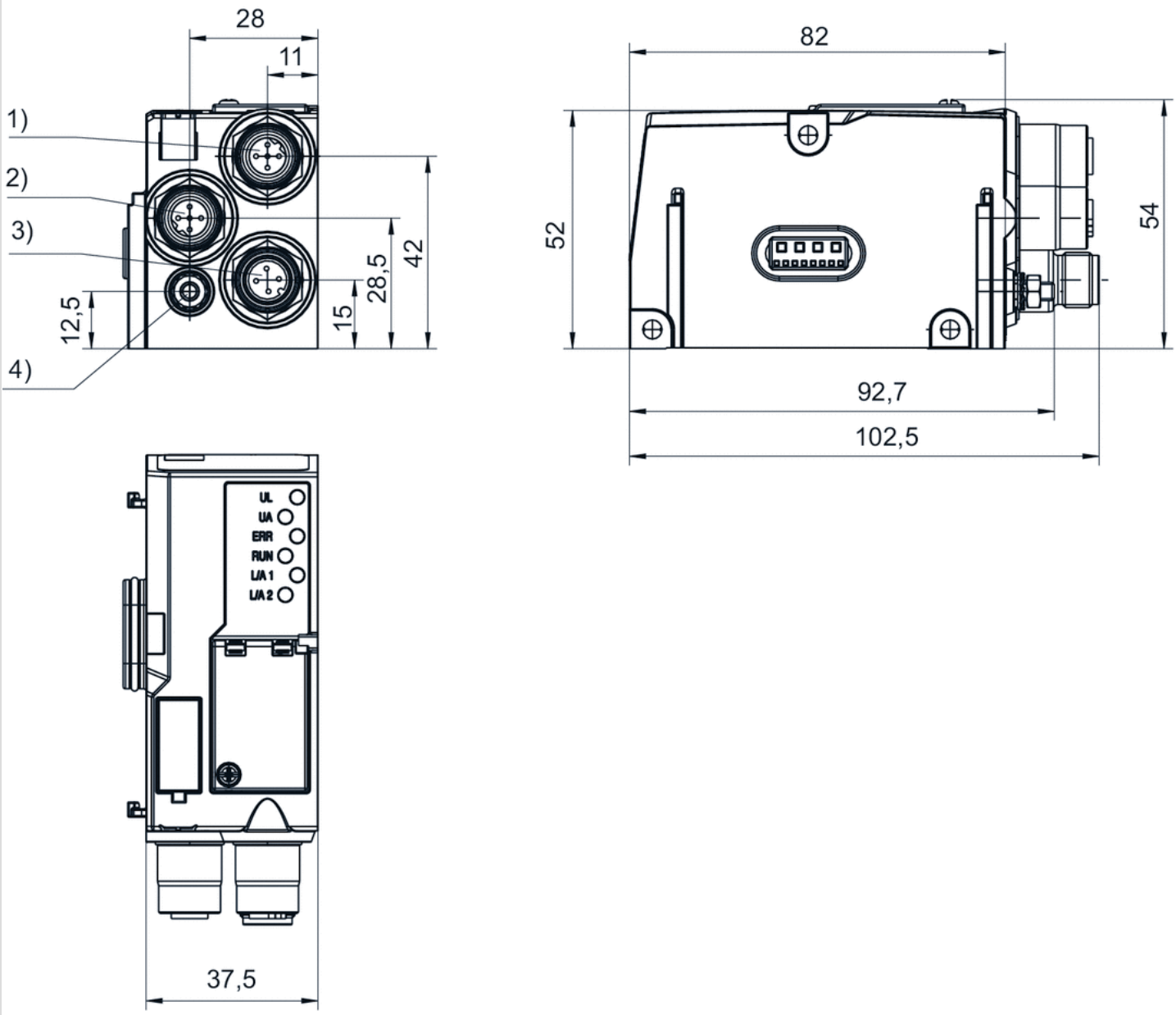

1) Fieldbus connection 2) Fieldbus connection 3) Power supply 4) Functional ground

Adapter module

- for series AES on B-design
- for series HF02-LG, HF03-LG, HF04, CD01-PI, CD10-PI, CD20-PI

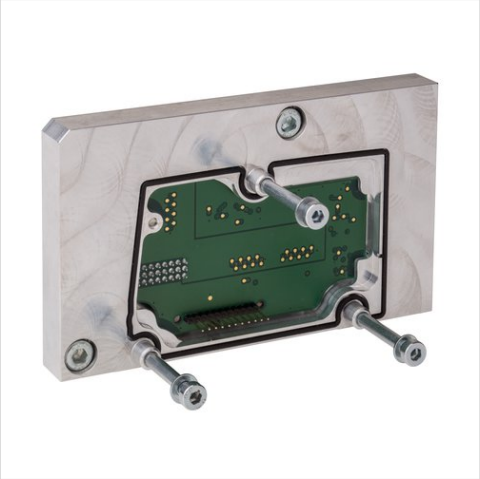

Ambient temperature min./max.	14 ... 140 °F
Weight	0.353 lbs

Technical data

Part No.	Type	Scope of delivery	Scope of delivery
R412023458	32 outputs	Includes screws and seals.	1 piece

Technical information

The adapter module is mounted on valve systems with a B-design interface for use with AES fieldbus couplers and AES I/O modules. See the operating instructions for further information (R412018150).

Technical information

Material	
Housing	Aluminum
Seals	Nitrile rubber

Dimensions

Dimensions

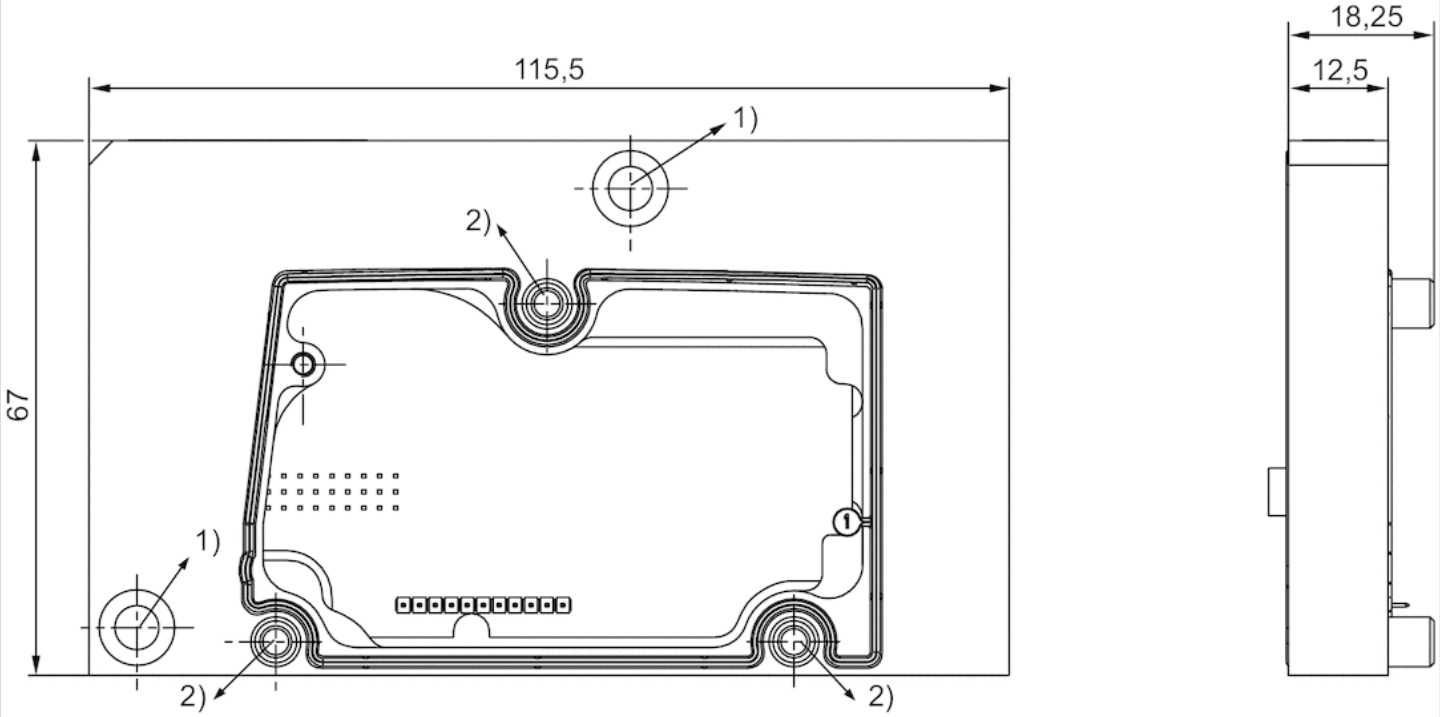

Includes screws and seals.
1) Torque: 3 Nm +0.5 Nm
2) Torque: 1.6 Nm +0.4 Nm

Optional fieldbus connection with I/O function (CMS), B-design

- B-design
- Bus coupler with driver
- Fieldbus protocol PROFIBUS DP CANopen DeviceNet EtherNET/IP PROFINET IO

Version	Bus coupler with driver
Ambient temperature min./max.	32 ... 122 °F
Operational voltage electronics	24 V DC
Electronics voltage tolerance	-15% / +20%
Operating voltage, actuators	24 V DC
Protection class	IP65
I/O module extension max.	6
Weight	See table below

The delivered product may vary from that in the illustration.

Technical data

Part No.	Fieldbus protocol	Port
		1
R412003484	PROFIBUS DP	Plug (male), M12, 5-pin, B-coded
R412008516	PROFIBUS DP	Plug (male), M12, 5-pin, B-coded
R412008518	CANopen	Plug (male), M12, 5-pin, A-coded
R412004346	DeviceNet	Plug (male), M12, 5-pin, A-coded
R412012755	EtherNET/IP	-
R412014581	PROFINET IO	Socket (female), M12x1, 4-pin, D-coded
R412014583	PROFINET IO	Socket (female), M12x1, 4-pin, D-coded

Part No.	Port	power supply
	2	
R412003484	Socket (female), M12, 5-pin, B-coded	Plug (male), M12, 4-pin, A-coded
R412008516	Socket (female), M12, 5-pin, B-coded	Plug (male), M12, 4-pin, A-coded
R412008518	Socket (female), M12, 5-pin, A-coded	Plug (male), M12, 4-pin, A-coded
R412004346	Socket (female), M12, 5-pin, A-coded	Plug (male), M12, 4-pin, A-coded
R412012755	Socket (female), M12, 5-pin, D-coded	Plug (male), M12, 4-pin, A-coded
R412014581	Socket (female), M12x1, 4-pin, D-coded	Plug (male), M12x1, 4-pin, A-coded
R412014583	Socket (female), M12x1, 4-pin, D-coded	Plug (male), 7/8″-16UNF, 5-pin

Part No.	Number of outputs for valve coils	Port
		Valve system
R412003484	24	Socket, 2.0 mm strip, 2x13-pin
R412008516	32	Socket, 2.0 mm strip, 3x13-pin
R412008518	32	Socket, 2.0 mm strip, 3x13-pin
R412004346	24	Socket, 2.0 mm strip, 2x13-pin
R412012755	32	Socket, 2.0 mm strip, 3x13-pin
R412014581	32	-

Part No.	Number of outputs for valve coils	Port
		Valve system
R412014583	32	-

Part No.	Power consumption electronics	Max. power consumption per coil	Weight	Fig.	
R412003484	0.12 A	0.063 mA	1.85 lbs	Fig. 1	1)
R412008516	0.12 A	0.063 mA	1.85 lbs	Fig. 1	1)
R412008518	0.12 A	0.063 mA	2.2 lbs	Fig. 1	1)
R412004346	0.12 A	0.063 mA	2.2 lbs	Fig. 1	1)
R412012755	0.12 A	0.063 mA	2.2 lbs	Fig. 2	2)
R412014581	0.1 A	0.1 mA	2.01 lbs	Fig. 1	1)
R412014583	0.1 A	0.1 mA	2.01 lbs	Fig. 3	1)

Scope of delivery incl. 2 tie rod extensions and seal, The following operating instructions can be found in the Media Center for:↩PROFIBUS DP: R499050016↩CANopen: R412005742↩DeviceNet: R499050019↩EtherNET/IP: R412012728

1) Connection with two valve voltage circuits.

2) Connection with two valve voltage circuits., Only star topology

Technical information

Caution: A reduced temperature range in accordance with the operating instructions may need to be considered in ATEX applications. You will find assignment schemes for the product in the operating instructions, or contact the nearest AVENTICS sales office.

Technical information

Material	
Housing	Die-cast aluminum

Dimensions

Fig. 1

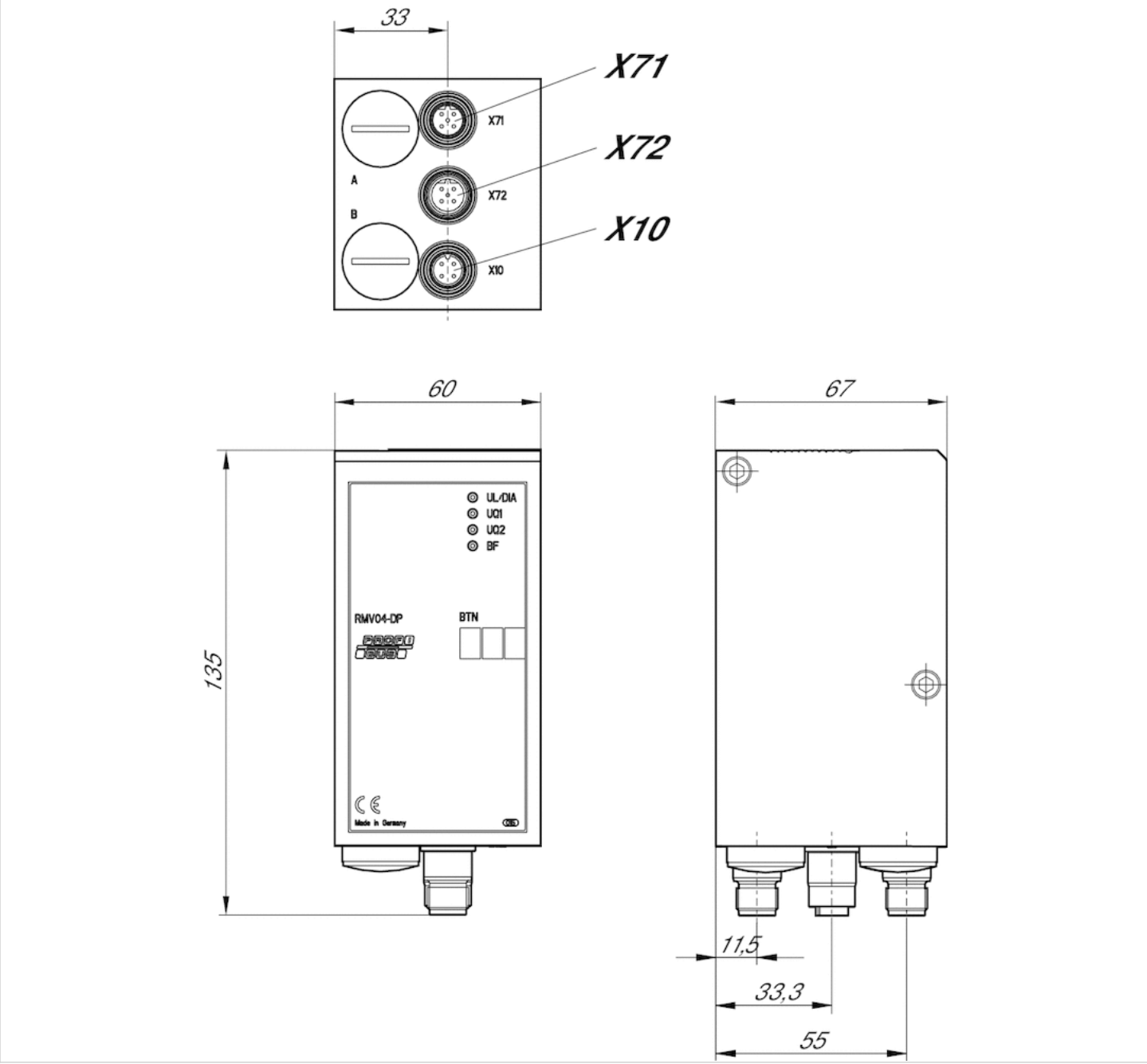

X71, (Bus IN), M12x1
X72, (Bus OUT), M12x1
X10, (Power), M12x1

Fig. 2

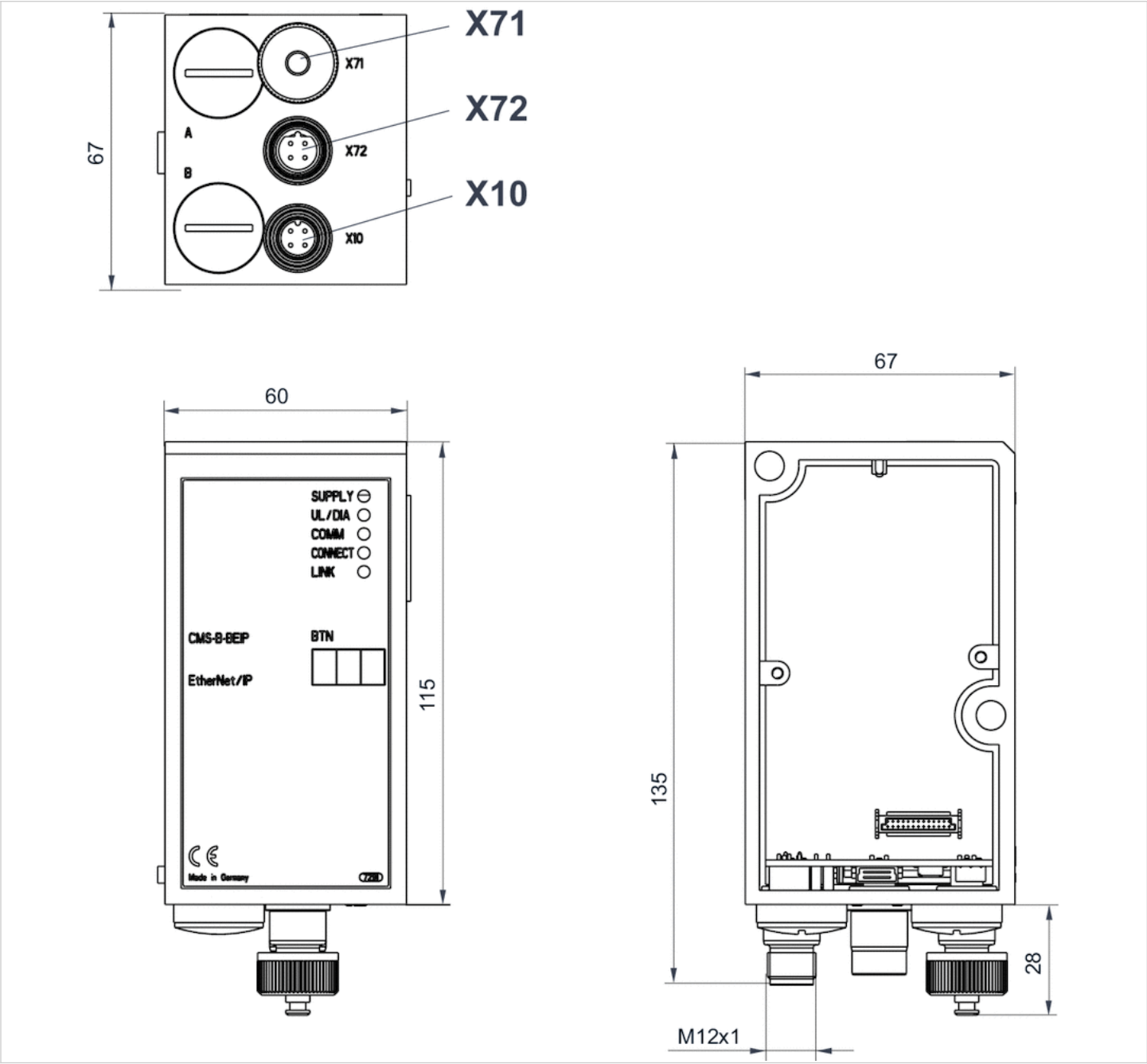

X71 = optional interface
X72 = Bus
X10 = Power

Fig. 3

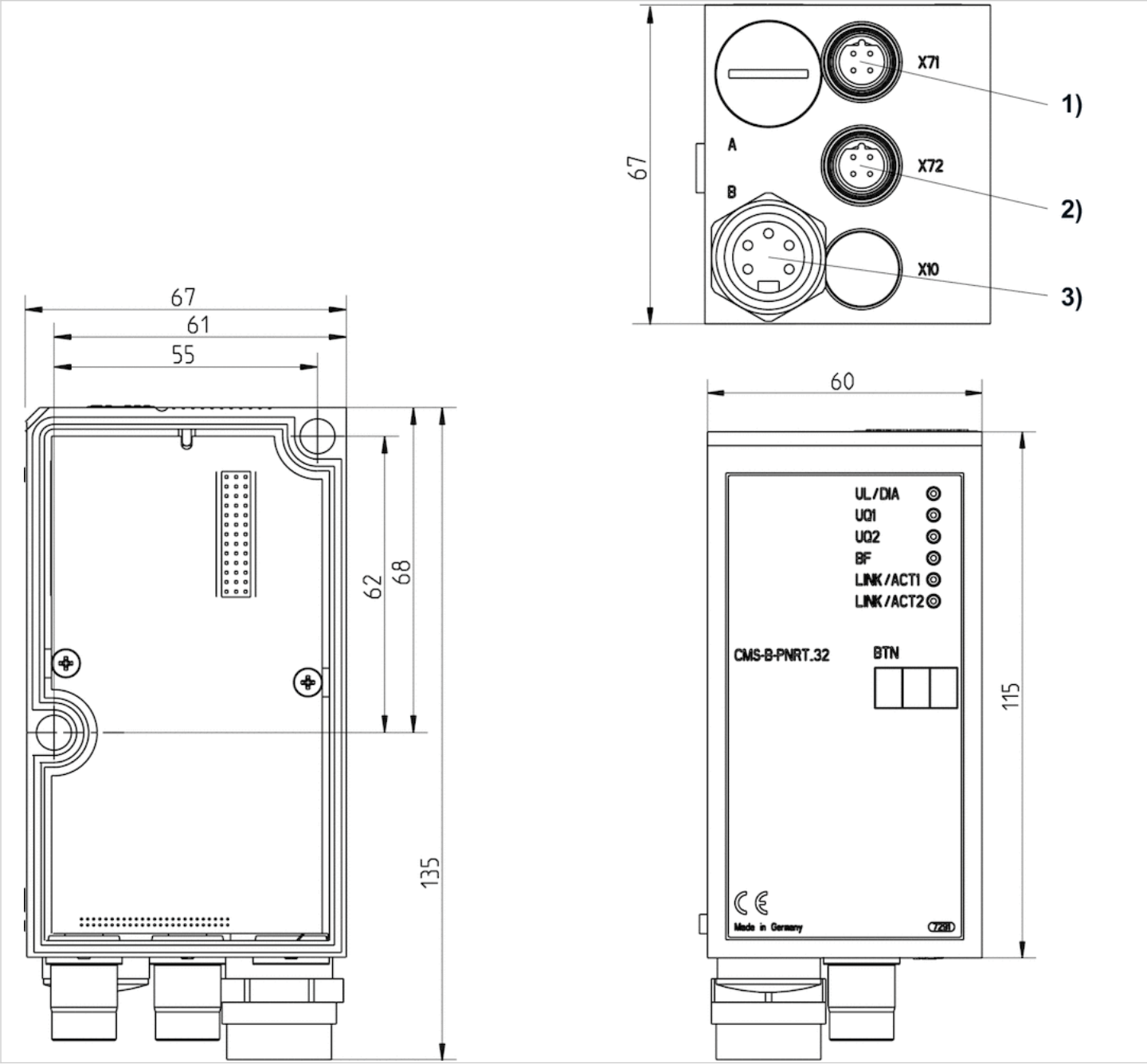

1) Bus IN 2) Bus OUT 3) Power supply

Series DDL

- B-design
- Driver
- Plug (male), M12, 5-pin, A-coded

Version	Driver
Ambient temperature min./max.	32 ... 122 °F
Operational voltage electronics	24 V DC
Power consumption electronics	0.2 A
Operating voltage, actuators	24 V DC
Actuator voltage tolerance	-10% / +10%
Total current for actuators	3 A
Protection class	IP65
Number of solenoid coils max.	24
Max. power consumption per coil	0.1 mA
Max. cable length	131.23 ft.
Max. number of DDL participants	14
Port Valve system	Socket (female), 2.0 mm strip, 3x13-pin
I/O module extension max.	6
I/O module extension Input Max.	3
I/O module extension Output Max.	3
Weight	2.29 lbs

Technical data

Part No.	Port	Port
	1	2
R412006880	Plug (male), M12, 5-pin, A-coded	Socket (female), M12, 5-pin, A-coded

Part No.	power supply
R412006880	Plug (male), M12, 4-pin, A-coded

Scope of delivery incl. 2 tie rod extensions and seal, The following operating instructions can be found in the Media Center: R412009417 + R499050020

Technical information

Max. current in 0 V line: 4 A
You will find assignment schemes for the product in the operating instructions, or contact the nearest AVENTICS sales office.
Caution: A reduced temperature range in accordance with the operating instructions may need to be considered in ATEX applications.

Technical information

Material	
Housing	Die-cast aluminum

Dimensions

Dimensions

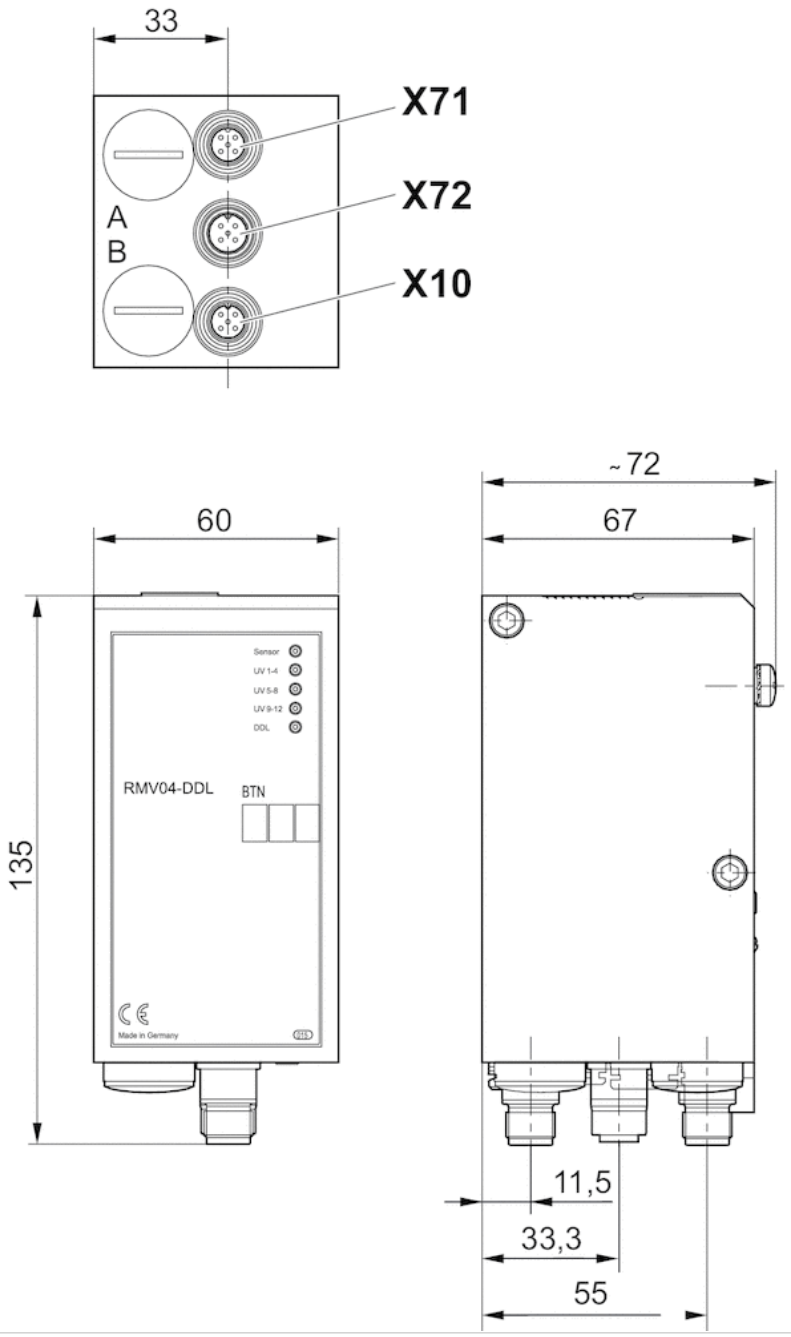

Series DDL

- B-design
- Driver
- Plug (male), M12, 5-pin, A-coded

Version	Driver
Ambient temperature min./max.	32 ... 122 °F
Operational voltage electronics	24 V DC
Power consumption electronics	0.05 A
Operating voltage, actuators	24 V DC
Actuator voltage tolerance	-10% / +10%
Total current for actuators	3 A
Protection class	IP65
Number of solenoid coils max.	32
Max. power consumption per coil	0.1 mA
Max. cable length	131.23 ft.
Max. number of DDL participants	14
Port Valve system	Socket (female), 2.0 mm strip, 2x13-pin
Weight	0.639 lbs

Technical data

Part No.	Port	Port
	1	2
R412008541	Plug (male), M12, 5-pin, A-coded	Socket (female), M12, 5-pin, A-coded

Part No.	power supply
R412008541	Plug (male), M12, 4-pin, A-coded

Scope of delivery incl. 2 tie rod extensions and seal, The following operating instructions can be found in the Media Center: R412009417 + R499050020

Technical information

Max. current in 0 V line: 4 A
You will find assignment schemes for the product in the operating instructions, or contact the nearest AVENTICS sales office.
Caution: A reduced temperature range in accordance with the operating instructions may need to be considered in ATEX applications.

Technical information

Material	
Housing	Die-cast aluminum

Dimensions

Dimensions

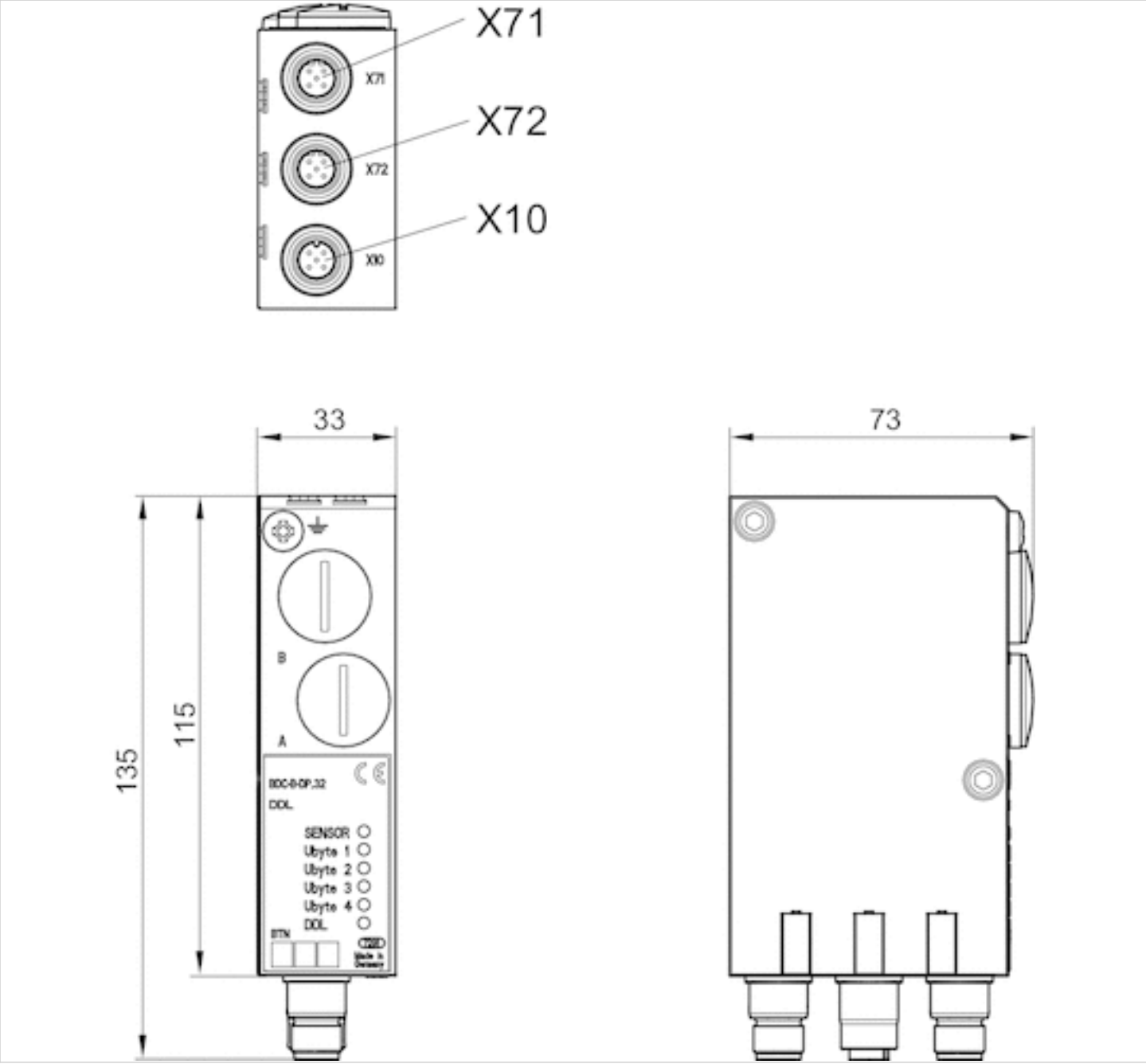

X71 = Bus IN
X72 = Bus OUT
X10 = power supply

Series AES

- digital inputs/outputs
- Socket (female), M12x1, 5-pin

Ambient temperature min./max.	14 ... 140 °F
Operational voltage electronics	24 V DC
Electronics voltage tolerance	-25% / +25%
Max. current per channel	0.5 A
Power supply for actuators	8x0,5 A
Total current for actuators	4 A
Protection class	IP65
Total current of sensors max.	1 A
Logic/actuator voltage	Galvanically isolated
Diagnosis	Short circuit
Generic emission standard in accordance with norm	EN 61000-6-4
Generic immunity standard in accordance with norm	EN 61000-6-2
Weight	0.242 lbs

Technical data

Part No.	Type	Port	power supply	Number of inputs	Number of outputs
		1			
R412018235	8DI4M12	Socket (female), M12x1, 5-pin	Internal	8	-
R412018250	8DO4M12	Socket (female), M12x1, 5-pin	Internal	-	8
R412018270	8DIDO4M12	Socket (female), M12x1, 5-pin	Internal	8	8

Part No.	I/O module version	
R412018235	Digital inputs	-
R412018250	Digital outputs	-
R412018270	Digital inputs Digital outputs Combination module	1)

Delivery contents: incl. 2 spring clamp elements and seal

1) Function specification for fieldbus configuration.

Technical information

You will find assignment schemes for the product in the operating instructions, or contact the nearest AVENTICS sales office.
The total current of all outputs (including valves) must not exceed 4 A in the overall system.
Voltage and short-circuit monitoring per LED.

Technical information

Material	
Housing	Polyamide fiber-glass reinforced

Dimensions

Dimensions

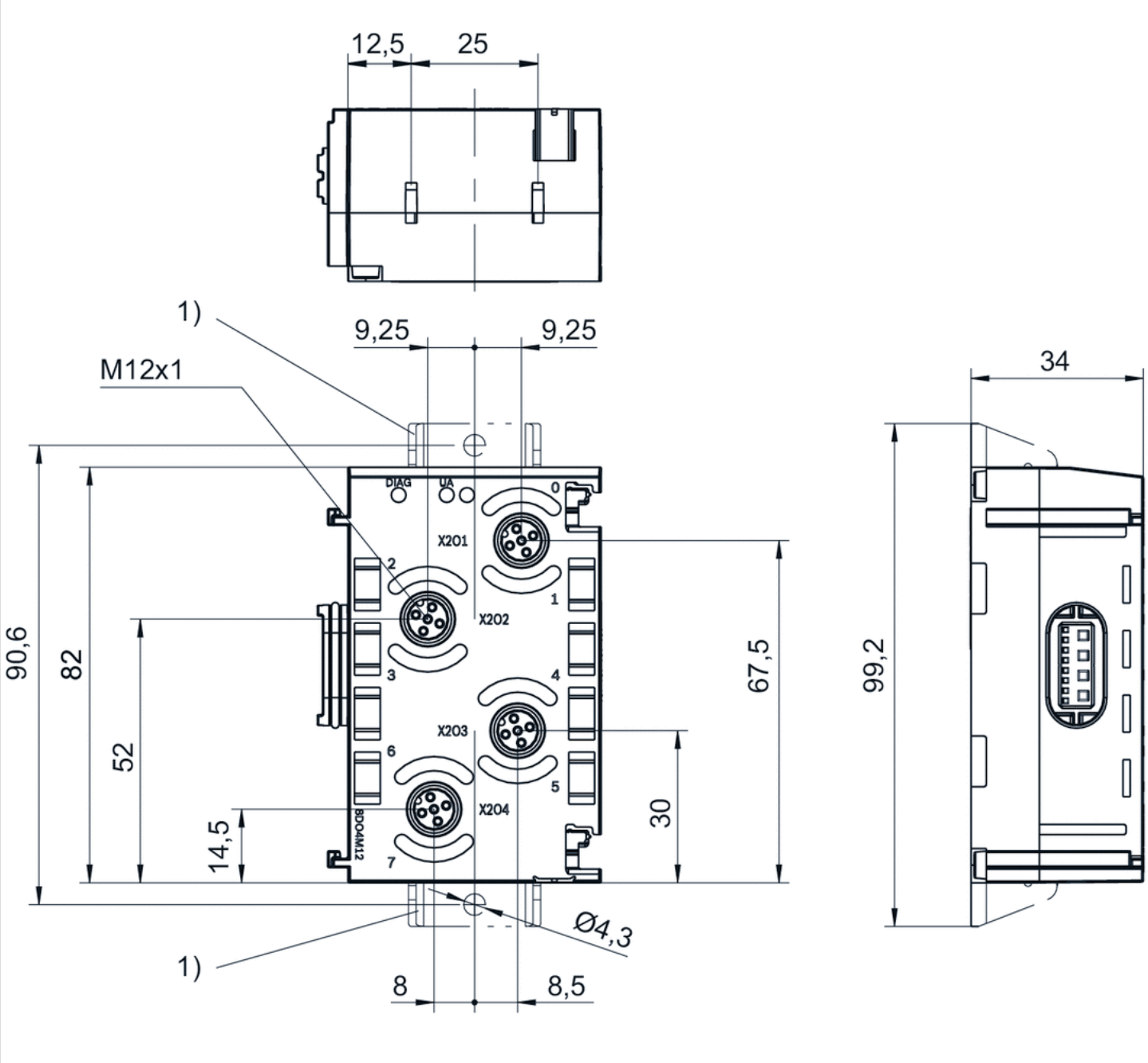

1) Retaining bracket (optional)

Pin assignments

Pin assignments, PNP

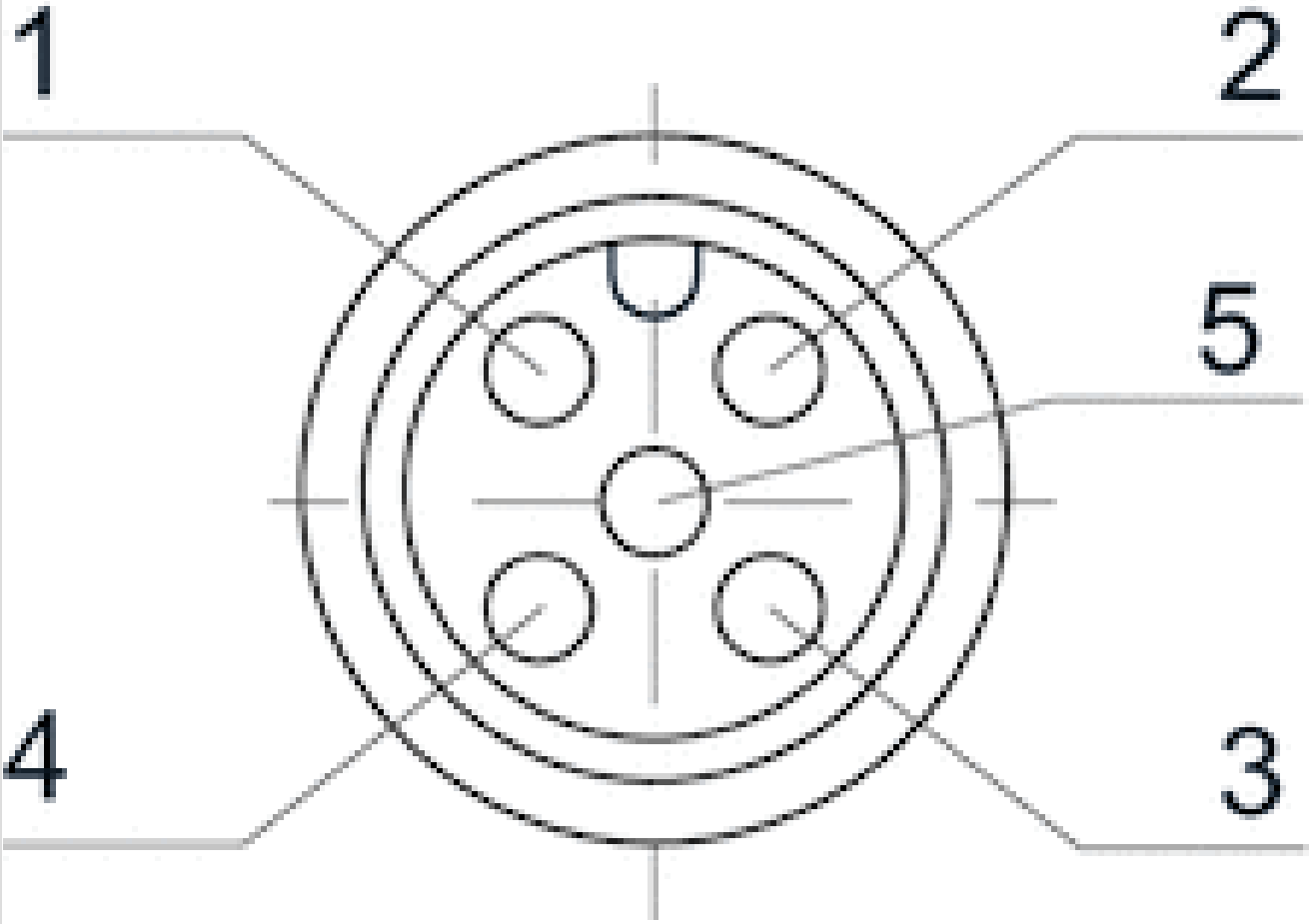

Pin	1	2	3	4	5
Input module	24 V DC	Input signal [X+1]	0 V DC	Input signal [X]	-
Output module	-	Output signal [X+1]	0 V DC	Output signal [X]	-

X = bit value

Series AES

- digital inputs/outputs
- Socket (female), M12, 8-pin

Ambient temperature min./max.	14 ... 140 °F
Operational voltage electronics	24 V DC
Electronics voltage tolerance	-10% / +10%
Max. current per channel	0.5 A
Total current for actuators	4 A
Protection class	IP65
Total current of sensors max.	1 A
Filter time	3 ms
Logic/actuator voltage	Galvanically isolated
Diagnosis	Short circuit
Generic emission standard in accordance with norm	EN 61000-6-4
Generic immunity standard in accordance with norm	EN 61000-6-2
Weight	0.242 lbs

Technical data

Part No.	Type	Port	power supply	Number of inputs	Number of outputs
		1			
R412018243	16DI4M12	Socket (female), M12, 8-pin	Internal	16	-
R412018263	16DO4M12	Socket (female), M12, 8-pin	Internal	-	16

Part No.	I/O module version
R412018243	Digital inputs
R412018263	Digital outputs

Delivery contents: incl. 2 spring clamp elements and seal

Technical information

You will find assignment schemes for the product in the operating instructions, or contact the nearest AVENTICS sales office.
The total current of all outputs (including valves) must not exceed 4 A in the overall system.
Voltage and short-circuit monitoring per LED.

Technical information

Material	
Housing	Polyamide fiber-glass reinforced

Dimensions

Dimensions

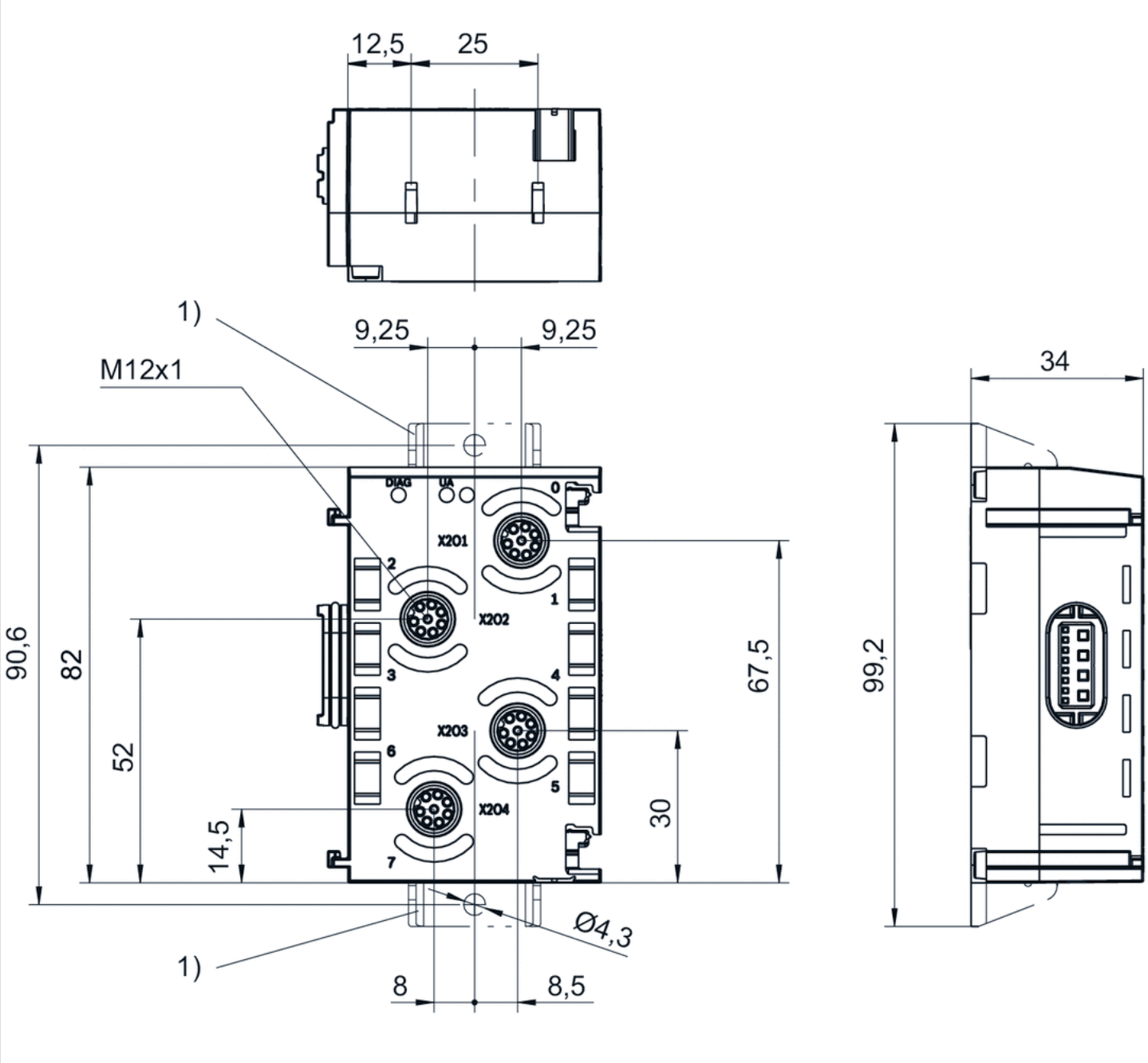

1) Retaining bracket (optional)

Pin assignments

Pin assignments, PNP

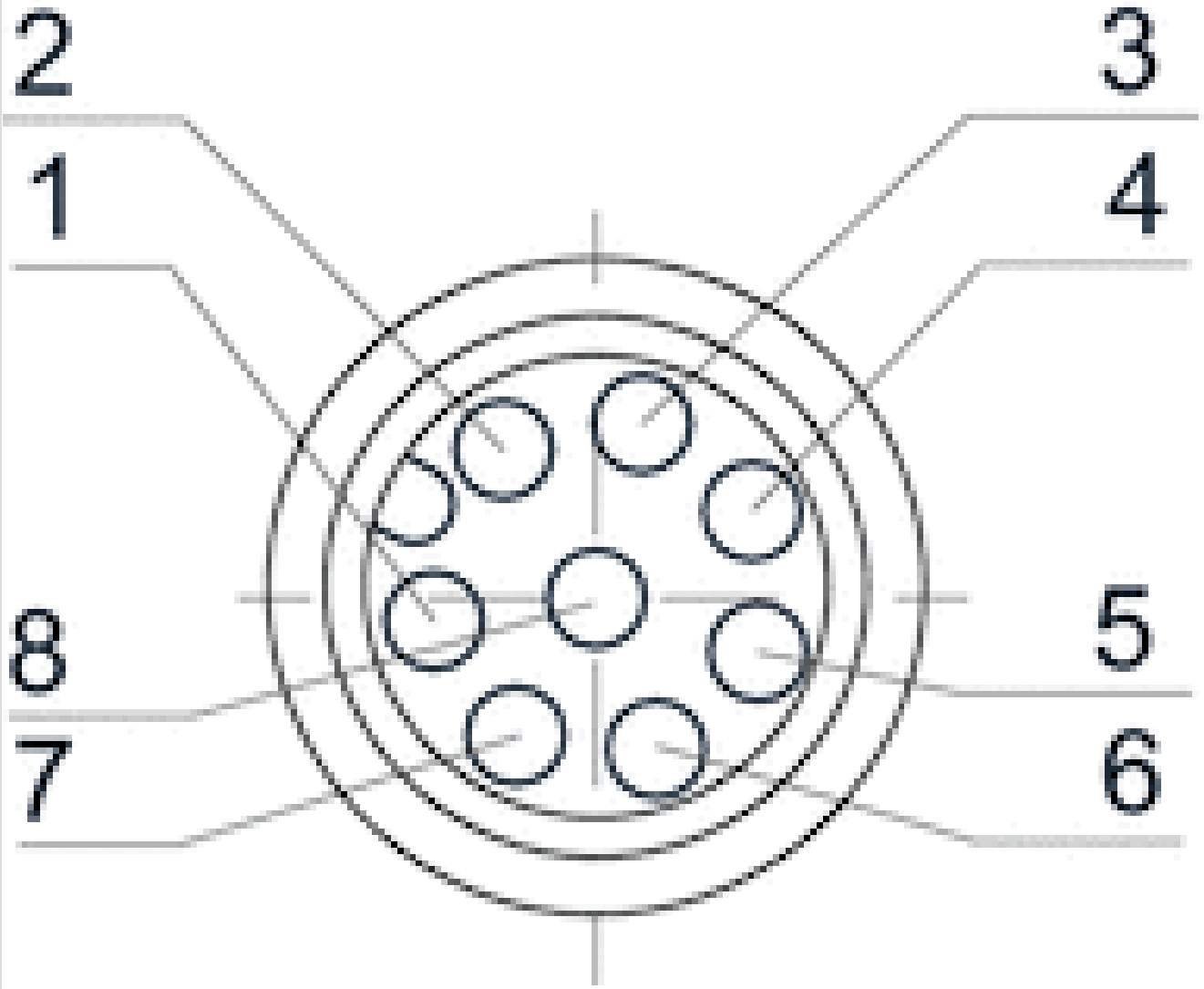

Pin	1	2
Input module	Input signal [X]	Input signal [X+1]
Output module	Output signal 24 V DC [X]	Output signal 24 V DC [X+1]

3	4	5	6	7	8
Input signal [X+2]	Input signal [X+3]	24 V DC	-	0 V DC	-
Output signal 24 V DC [X+2]	Output signal 24 V DC [X+3]	-	-	0 V DC	-

X = bit value

X = bit value

Series AES

- digital outputs
- Socket, D-Sub, 25-pin

Ambient temperature min./max.	14 ... 140 °F
Operational voltage electronics	24 V DC
Max. current per channel	0.5 A
Total current for actuators	4 A
Protection class	IP65
Logic/actuator voltage	Galvanically isolated
Diagnosis	Short circuit Undervoltage
Generic emission standard in accordance with norm	EN 61000-6-4
Generic immunity standard in accordance with norm	EN 61000-6-2
Weight	0.254 lbs

Technical data

Part No.	Type	Port	power supply	Number of inputs	Number of outputs
		1			
R412018254	24DO1DSUB25	Socket, D-Sub, 25-pin	Internal	24	24

Delivery contents: incl. 2 spring clamp elements and seal

Technical information

You will find assignment schemes for the product in the operating instructions, or contact the nearest AVENTICS sales office.
Voltage and short-circuit monitoring per LED.

Technical information

Material	
Housing	Polyamide fiber-glass reinforced

Dimensions

Dimensions

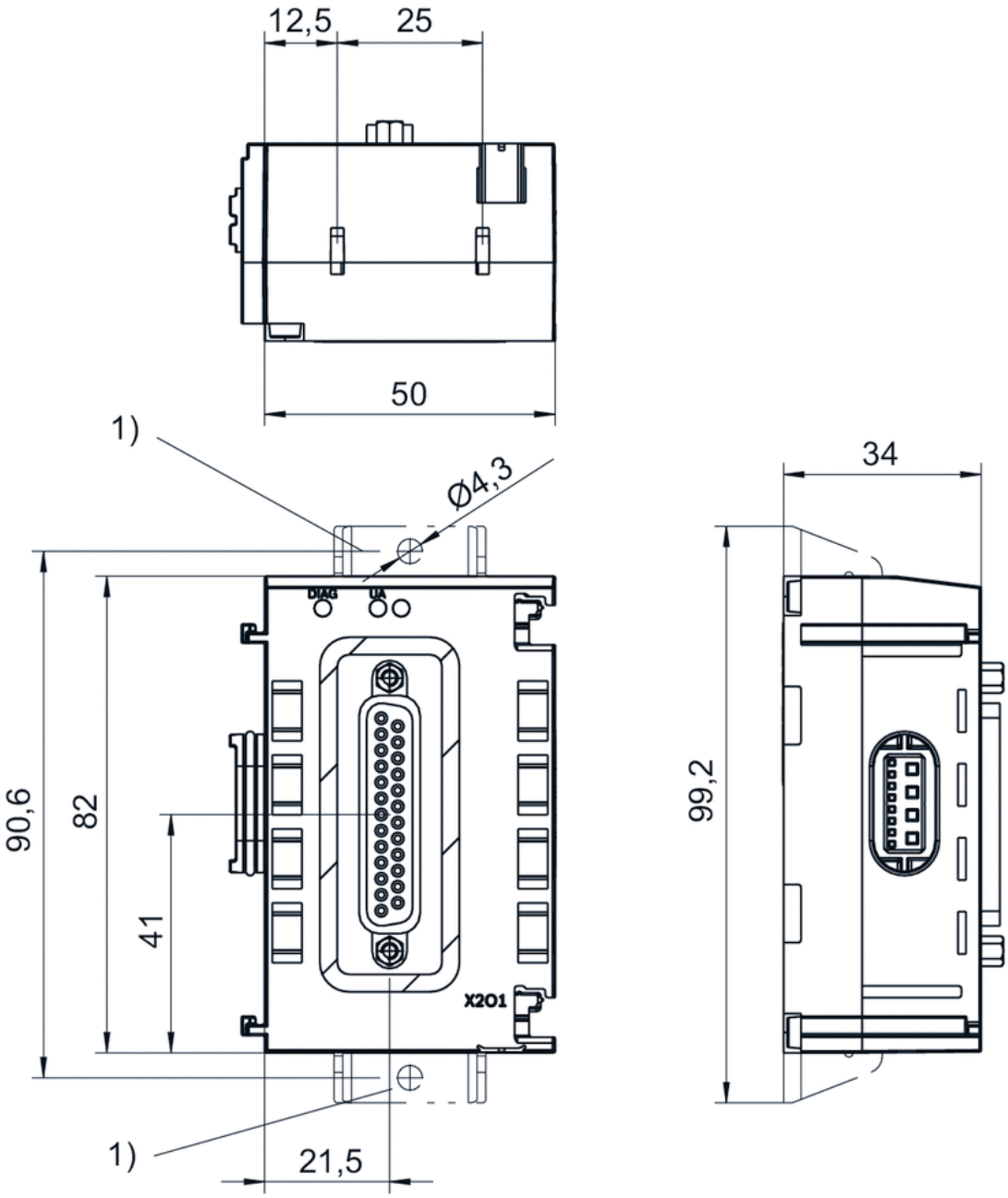

1) Retaining bracket (optional)

Pin assignments

PIN assignment and cable colors, cable identification as per DIN 47100

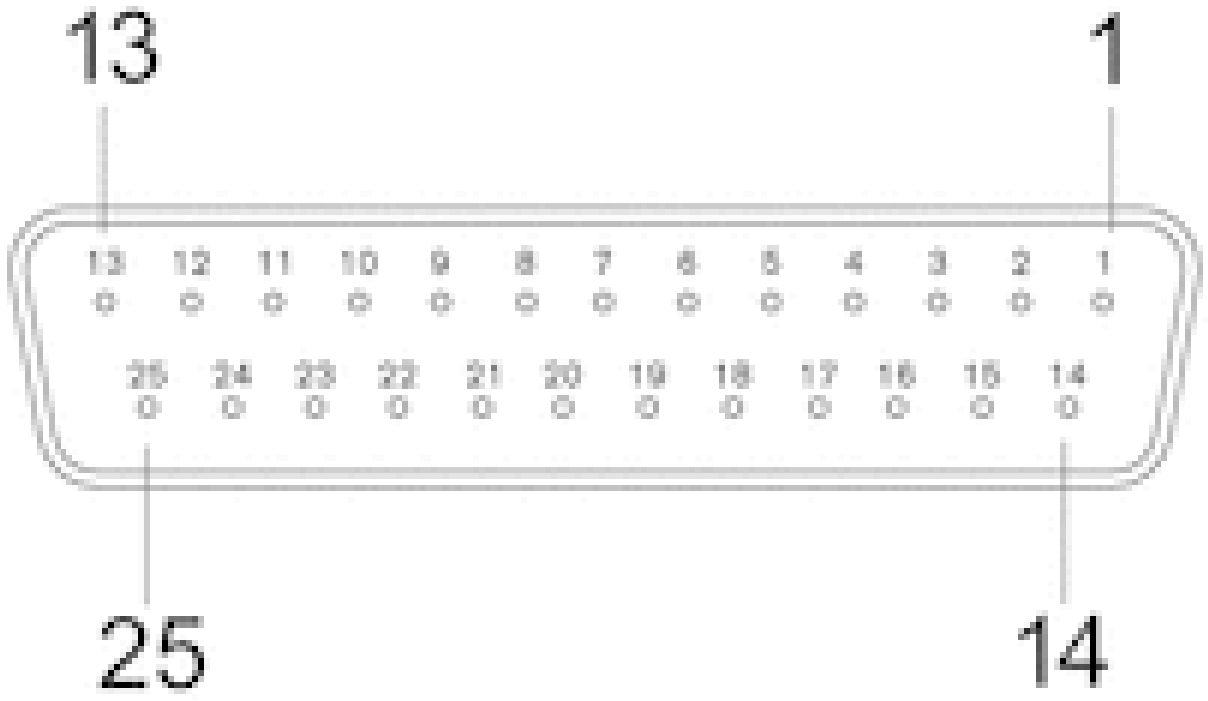

Socket

Pin	1	2	3	4	5	6	7	8	9	10	11
Output module	[X]	[X+0.1]	[X+0.2]	[X+0.3]	[X+0.4]	[X+0.5]	[X+0.6]	[X+0.7]	[X+1]	[X+1.1]	[X+1.2]

12	13	14	15	16	17	18	19	20	21	22	23	24
[X+1.3]	[X+1.4]	[X+1.5]	[X+1.6]	[X+1.7]	[X+2.0]	[X+2.1]	[X+2.2]	[X+2.3]	[X+2.4]	[X+2.5]	[X+2.6]	[X+2.7]

25
0 V DC

X = bit value

Series AES

- digital inputs
- Spring clamp connections

Ambient temperature min./max.	14 ... 140 °F
Operational voltage electronics	24 V DC
Electronics voltage tolerance	-25% / +25%
Max. current per channel	0.5 A
Protection class	IP20
Total current of sensors max.	4 A
Logic/actuator voltage	Galvanically isolated
Diagnosis	Short circuit
Generic emission standard in accordance with norm	EN 61000-6-4
Generic immunity standard in accordance with norm	EN 61000-6-2
Weight	0.254 lbs

Technical data

Part No.	Type	Port	power supply	Number of inputs
		1		
R412018242	16DI48SC	Spring clamp connections	Internal	16

Delivery contents: incl. 2 spring clamp elements and seal

Technical information

You will find assignment schemes for the product in the operating instructions, or contact the nearest AVENTICS sales office.
Voltage and short-circuit monitoring per LED.
The clamp area for stranded wires is between 0.2 and 1.5 mm2.

Technical information

Material	
Housing	Polyamide fiber-glass reinforced

Dimensions

Dimensions

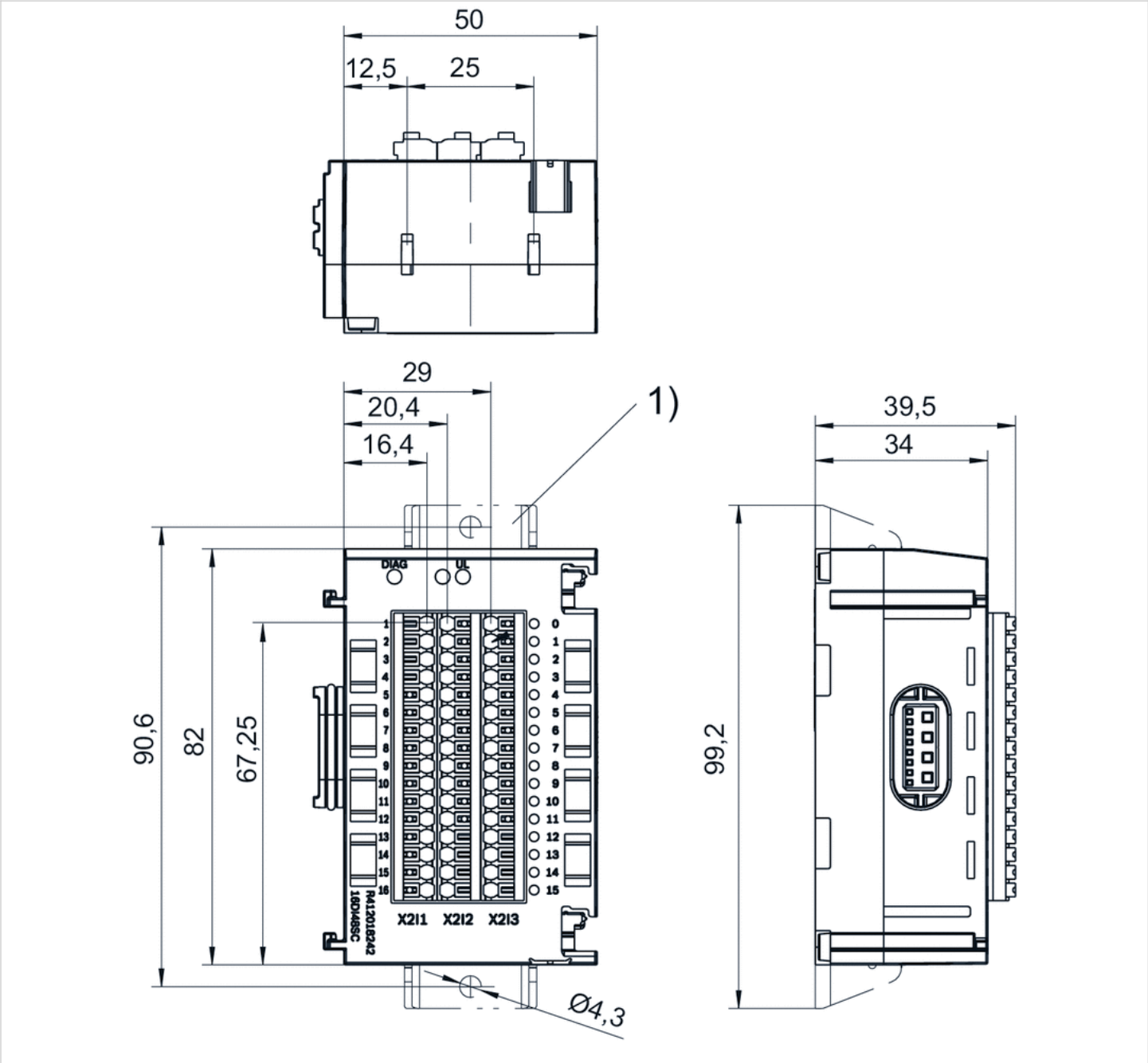

1) Retaining bracket (optional)

Series AES

- digital outputs
- Spring clamp connections

Ambient temperature min./max.	14 ... 140 °F
Operational voltage electronics	24 V DC
Electronics voltage tolerance	-25% / +25%
Max. current per channel	0.5 A
Total current for actuators	4 A
Protection class	IP20
Logic/actuator voltage	Galvanically isolated
Diagnosis	Short circuit
Generic emission standard in accordance with norm	EN 61000-6-4
Generic immunity standard in accordance with norm	EN 61000-6-2
Weight	0.254 lbs

Technical data

Part No.	Type	Port	power supply	Number of outputs	I/O module version
		1			
R412018252	16DO32SC	Spring clamp connections	Internal	16	Digital outputs

Delivery contents: incl. 2 spring clamp elements and seal

Technical information

You will find assignment schemes for the product in the operating instructions, or contact the nearest AVENTICS sales office.
The total current of all outputs (including valves) must not exceed 4 A in the overall system.
Voltage and short-circuit monitoring per LED.
The clamp area for stranded wires is between 0.2 and 1.5 mm2.

Technical information

Material	
Housing	Polyamide fiber-glass reinforced

Dimensions

Dimensions

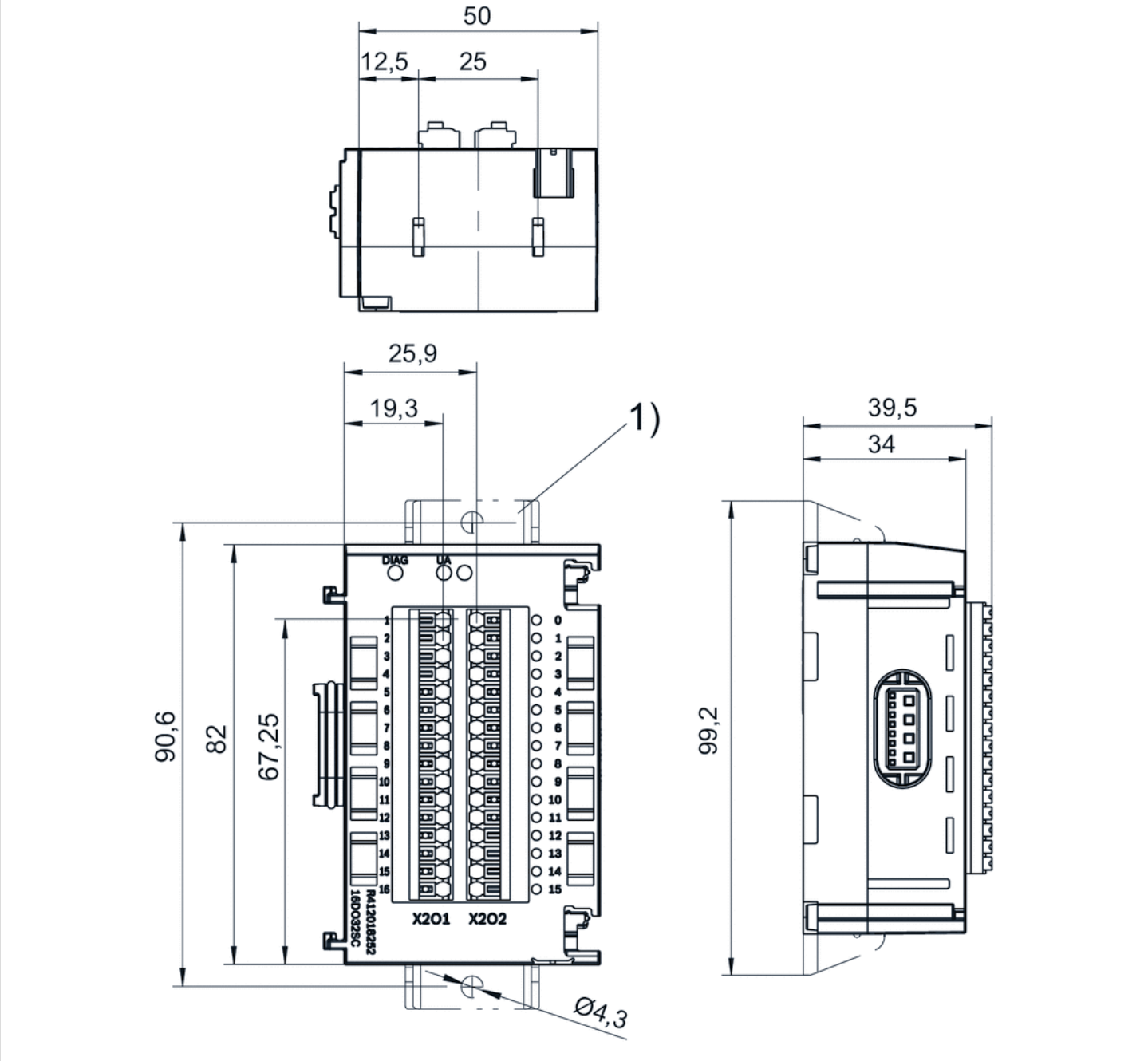

1) Retaining bracket (optional)

Dimensions

Port	X201	
Contact	1	2
Function	Output signal 24 V DC bit 0.0	Output signal 24 V DC bit 0.1

3	4
Output signal 24 V DC bit 0.2	Output signal 24 V DC bit 0.3

5	6
Output signal 24 V DC bit 0.4	Output signal 24 V DC bit 0.5

7	8
Output signal 24 V DC bit 0.6	Output signal 24 V DC bit 0.7

9	10
Output signal 24 V DC bit 1.0	Output signal 24 V DC bit 1.1

11	12
Output signal 24 V DC bit 1.2	Output signal 24 V DC bit 1.3

13	14
Output signal 24 V DC bit 1.4	Output signal 24 V DC bit 1.5

		X202
15	16	1-16
Output signal 24 V DC bit 1.6	Output signal 24 V DC bit 1.7	0 V DC

Series AES

- control module M12x1, 5-pin ▸ with external power supply ▸ control of E/P pressure regulators ▸ position control ▸ superordinate control
- I/O module version
- Socket (female), M12x1, 5-pin

Version	I/O module version
Ambient temperature min./max.	14 ... 140 °F
Operational voltage electronics	24 V DC
Protection class	IP65
Diagnosis	Short circuit Undervoltage
Generic emission standard in accordance with norm	EN 61000-6-4
Generic immunity standard in accordance with norm	EN 61000-6-2
Weight	0.242 lbs

Technical data

Part No.	Type	Port	power supply
		1	
R412018293	2AI2AO2M12-C	Socket (female), M12x1, 5-pin	Plug (male), M12, 4-pin, A-coded

Part No.	Number of inputs	Number of outputs
R412018293	2	2

Part No.	Analog inputs
R412018293	0 - 10 V / ± 10 V, 2 - 10 V / ± 10 V, 0 - 20 mA / ± 20 mA, 4 - 20 mA / ± 20 mA

Part No.	Analog outputs
R412018293	0 - 10 V / ± 10 V, 0 ... 20 mA, 4 ... 20 mA

Part No.	I/O module version
R412018293	Analog inputs Analog outputs

Delivery contents: incl. 2 spring clamp elements and seal

freely selectable signals, configurable

Technical information

Information on the assignment scheme and control parameters can be found in the operating instructions. Or, contact your nearest AVENTICS sales office.
The total current of all outputs (including valves) must not exceed 4 A in the overall system.
After direct connection to an electropneumatic pressure regulator suitable for controlling positions or superior control circuits.
Suitable for direct connection of an electropneumatic pressure regulator from the ED series.

Technical information

Material	
Housing	Polyamide fiber-glass reinforced

Dimensions

Dimensions

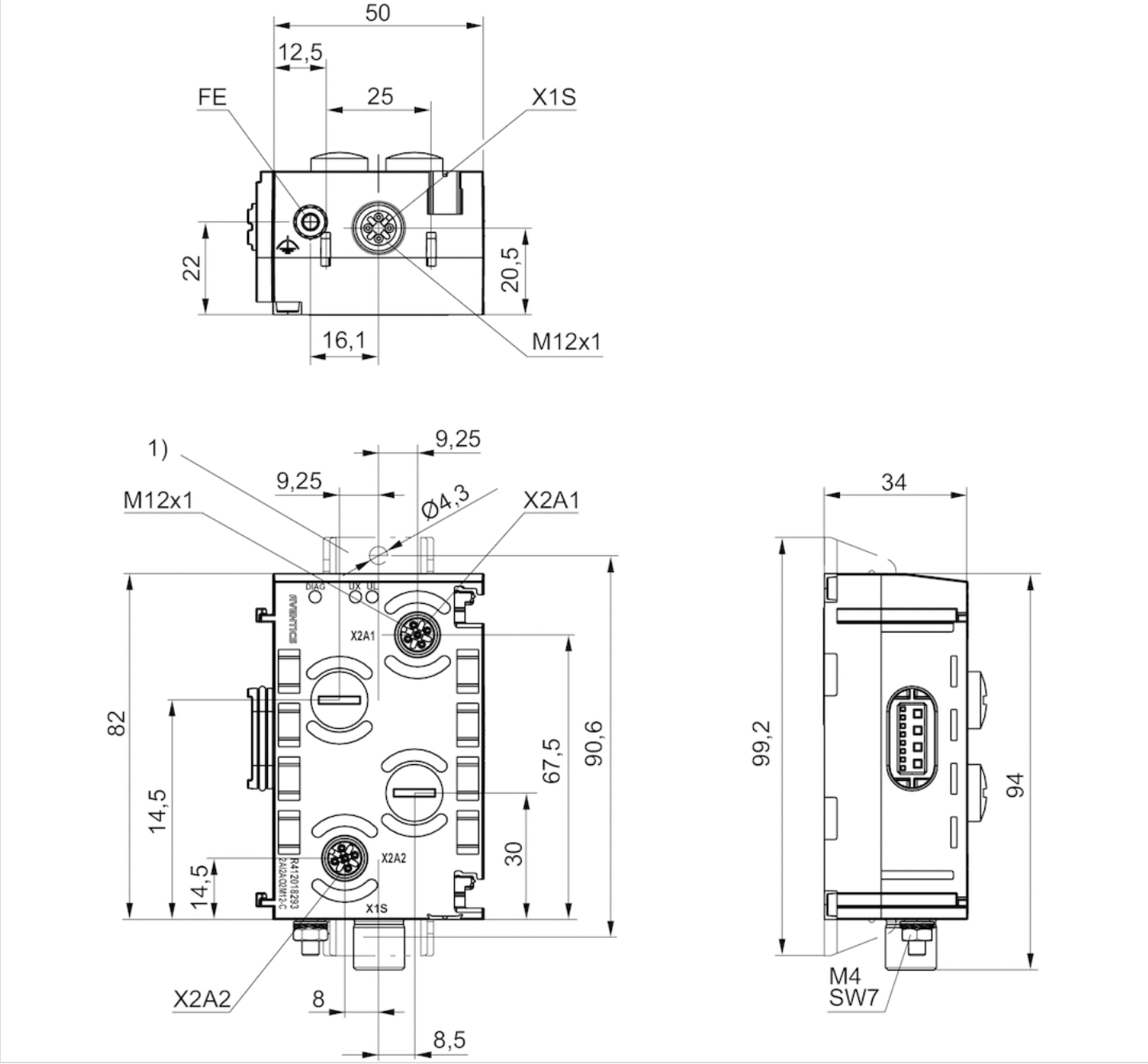

1) Retaining bracket (optional)

Pin assignments

Pin assignments, Socket (female)

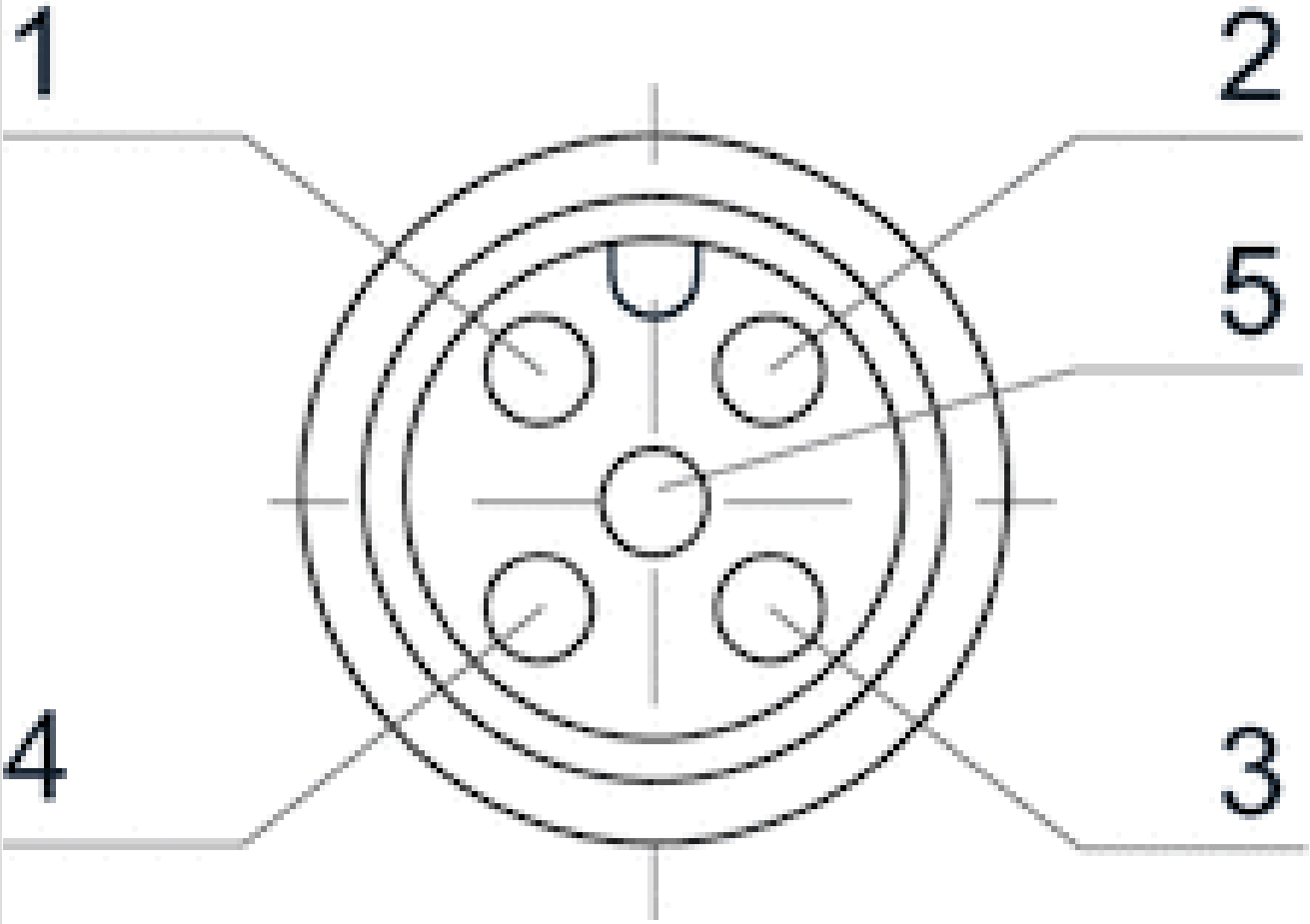

Pin	1	2	3	4
Socket (female) X2A1 - X2A2	24 V DC	Output signal	0 V DC	Input signal
Plug (male) X1S	-	24 V DC	-	0 V DC

5
Shield, connected internally with ground screw 2)
-

Series AES

- analog inputs/outputs, M12x1, 5-pin
- I/O module version
- Socket (female), M12, 5-pin

Version	I/O module version
Ambient temperature min./max.	14 ... 140 °F
Operational voltage electronics	24 V DC
Max. current per channel	0.5 A
Protection class	IP65
Diagnosis	Short circuit Undervoltage
Generic emission standard in accordance with norm	EN 61000-6-4
Generic immunity standard in accordance with norm	EN 61000-6-2
Weight	0.242 lbs

Technical data

Part No.	Type	Port	power supply	Number of inputs	Number of outputs
		1			
R412018277	2AI2M12-E	Socket (female), M12, 5-pin	Internal	2	-
R412018278	4AI4M12-E	Socket (female), M12, 5-pin	Internal	4	-
R412018281	2AO2M12-E	Socket (female), M12, 5-pin	Internal	-	2

Part No.	Analog inputs
R412018277	0 - 10 V / ± 10 V, 2 - 10 V / ± 10 V, 0 - 20 mA / ± 20 mA, 4 - 20 mA / ± 20 mA
R412018278	0 ... 10 V, 2 - 10 V, 0 ... 20 mA, 4 ... 20 mA
R412018281	-

Part No.	Analog outputs	
R412018277	-	1)
R412018278	-	-
R412018281	0 - 10 V / ± 10 V, 0 ... 20 mA, 4 ... 20 mA	1)

Delivery contents: incl. 2 spring clamp elements and seal

1) freely selectable signals, configurable

Technical information

You will find assignment schemes for the product in the operating instructions, or contact the nearest AVENTICS sales office.
The total current of all outputs (including valves) must not exceed 4 A in the overall system.
Voltage and short-circuit monitoring per LED.
The input channels have an input resistance of 120 ohms in the current range and 100 kiloohms in the voltage range.
The output channels can drive a maximum ohmic load of 450 ohms in the current range. The minimum resistance in the voltage range is 1 kiloohm.

Technical information

Material	
Housing	Polyamide fiber-glass reinforced

Dimensions

Dimensions

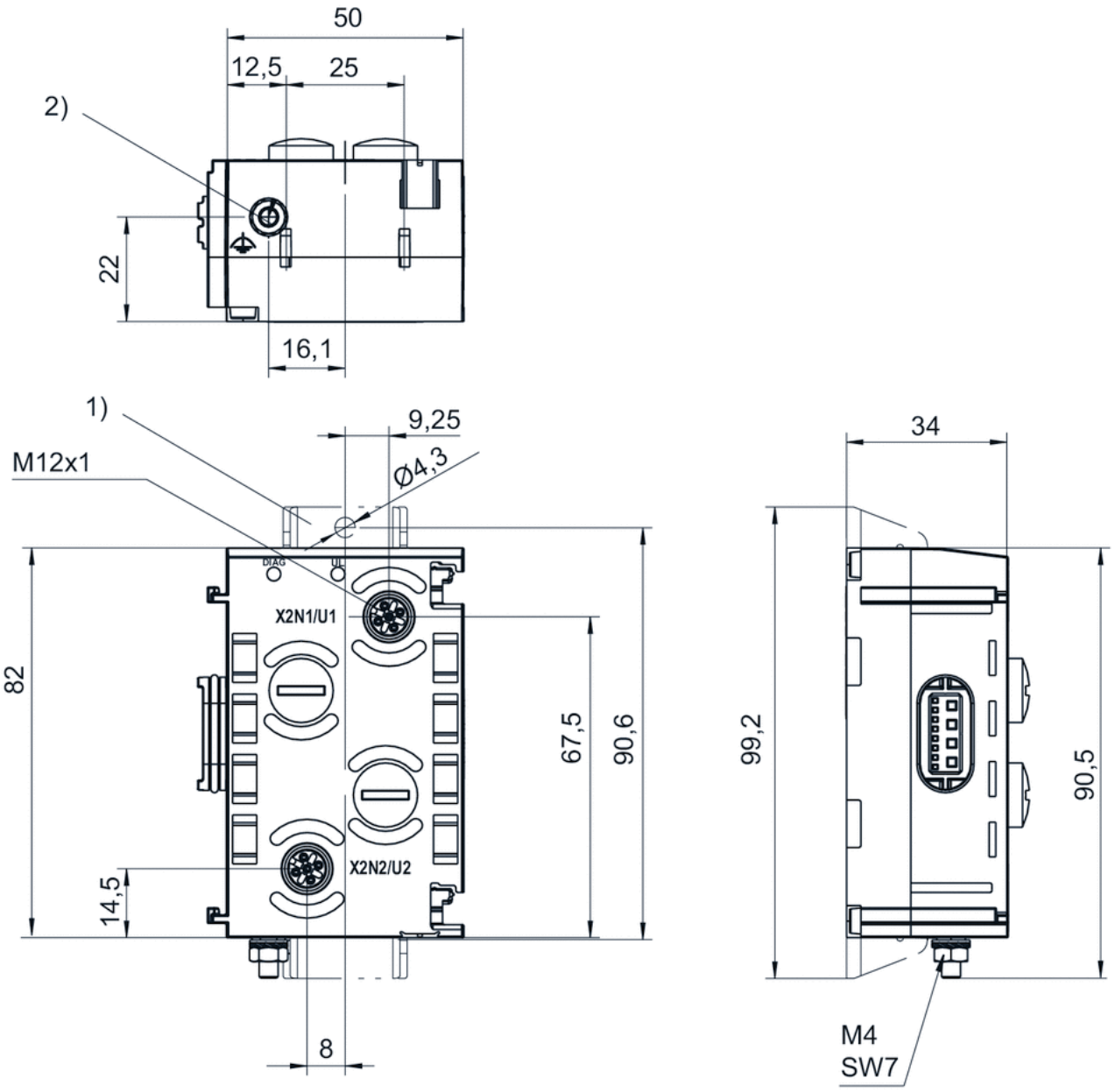

1) Retaining bracket (optional)
2) Ground

Pin assignments

Pin assignments, Socket (female)

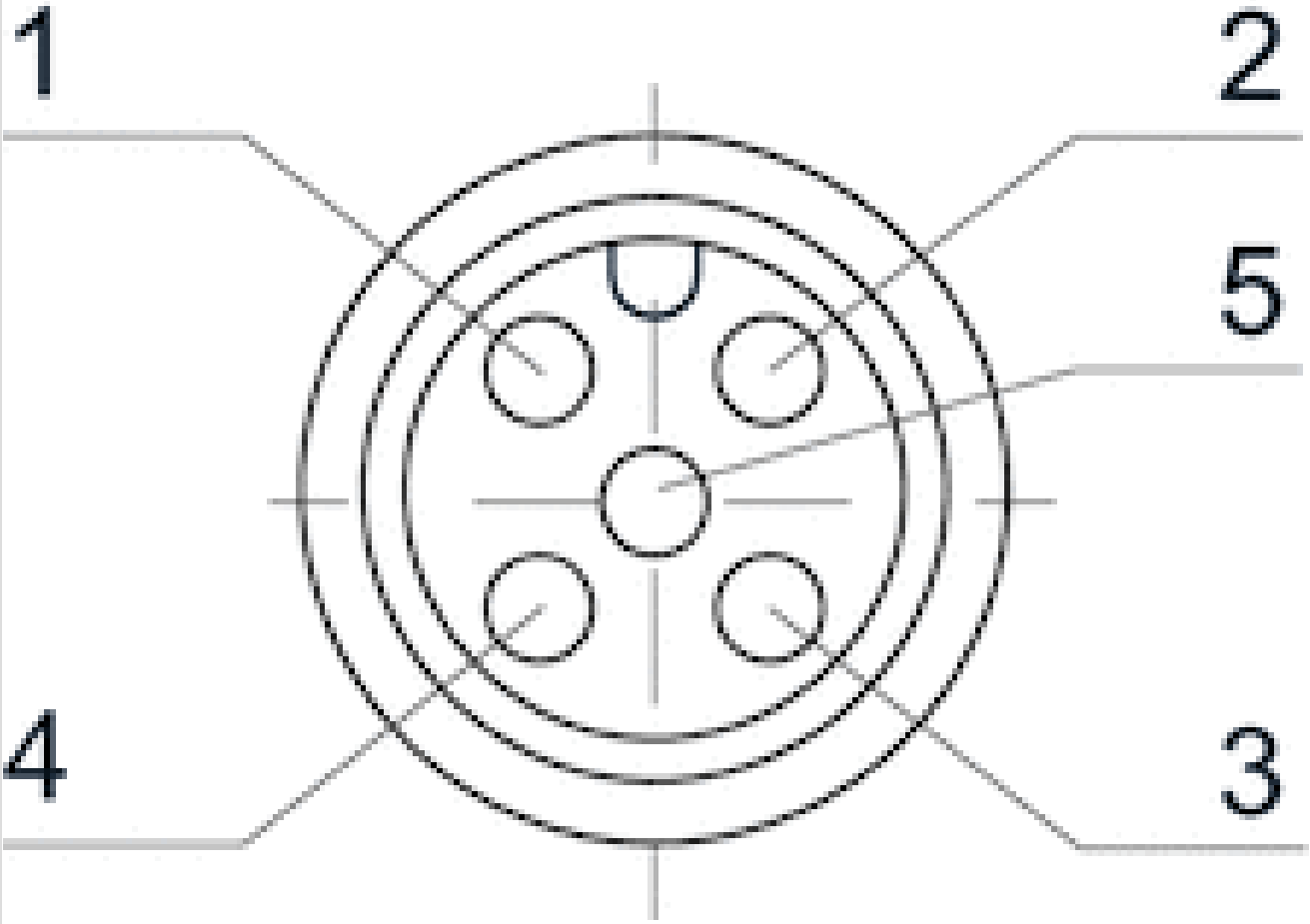

Pin	1
Socket (female) X2N1 - X2N22AI2M12-E	24 V DC
Socket (female) X2U1 - X2U44AI4M12-E	24 V DC
Socket (female) X2U1 - X2U22AO2M12-E	not assigned

2	3
Input signal (differential input, positive signal)	0 V DC
Input signal (differential input, positive signal)	0 V DC
Output signal	0 V DC

4
Input signal (differential input, negative signal, or connected externally to 0 V (pin 3))
Input signal (0 V, connected to pin 3 internally)
not assigned

5
Shield, connected internally with ground screw 2)
Shield, connected internally with ground screw 2)
Shield, connected internally with ground screw 2)

Series AES

- analog inputs/outputs M12x1, 5-pin ▸ with external power supply ▸ control of E/P pressure regulators
- Socket (female), M12x1, 5-pin

Ambient temperature min./max.	14 ... 140 °F
Operational voltage electronics	24 V DC
Max. current per channel	1.2 A
Protection class	IP65
Diagnosis	Short circuit Undervoltage
Generic emission standard in accordance with norm	EN 61000-6-4
Generic immunity standard in accordance with norm	EN 61000-6-2
Weight	0.242 lbs

Technical data

Part No.	Type	Port
		1
R412018287	2AI2AO2M12-AE	Socket (female), M12x1, 5-pin

Part No.	power supply	Number of inputs	Number of outputs
R412018287	Plug (male), M12, 4-pin, A-coded	2	2

Part No.	Analog inputs
R412018287	0 - 10 V / ± 10 V, 2 - 10 V / ± 10 V, 0 - 20 mA / ± 20 mA, 4 - 20 mA / ± 20 mA

Part No.	Analog outputs
R412018287	0 - 10 V / ± 10 V, 0 ... 20 mA, 4 ... 20 mA

Part No.	I/O module version
R412018287	Analog inputs Analog outputs

Delivery contents: incl. 2 spring clamp elements and seal

freely selectable signals, configurable

Technical information

You will find assignment schemes for the product in the operating instructions, or contact the nearest AVENTICS sales office.
The total current of all outputs (including valves) must not exceed 4 A in the overall system.
Suitable for direct connection of an electropneumatic pressure regulator from the ED series.

Technical information

Material	
Housing	Polyamide fiber-glass reinforced

Dimensions

Dimensions

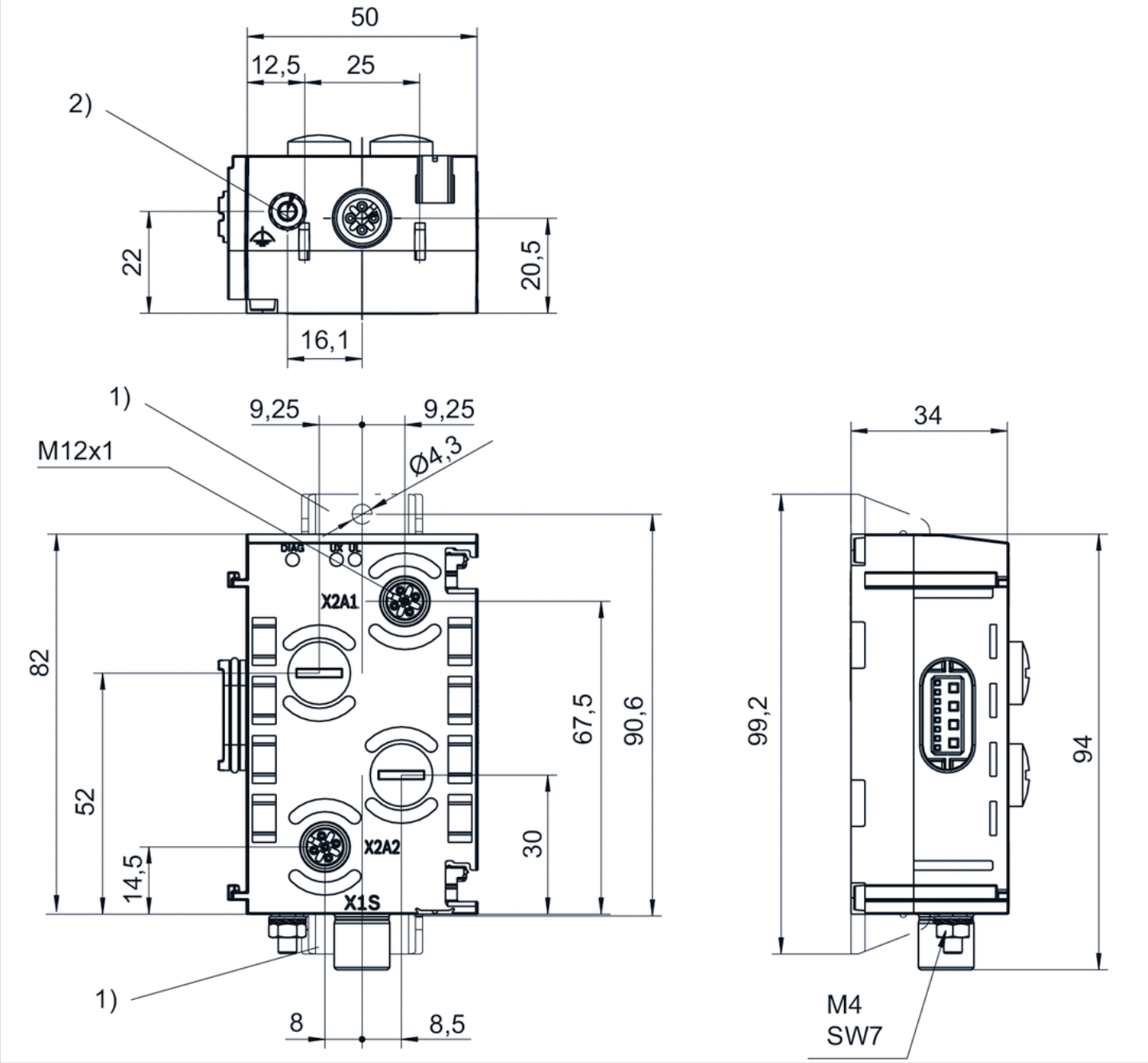

1) Retaining bracket (optional)
2) Ground

Pin assignments

Plug (male)

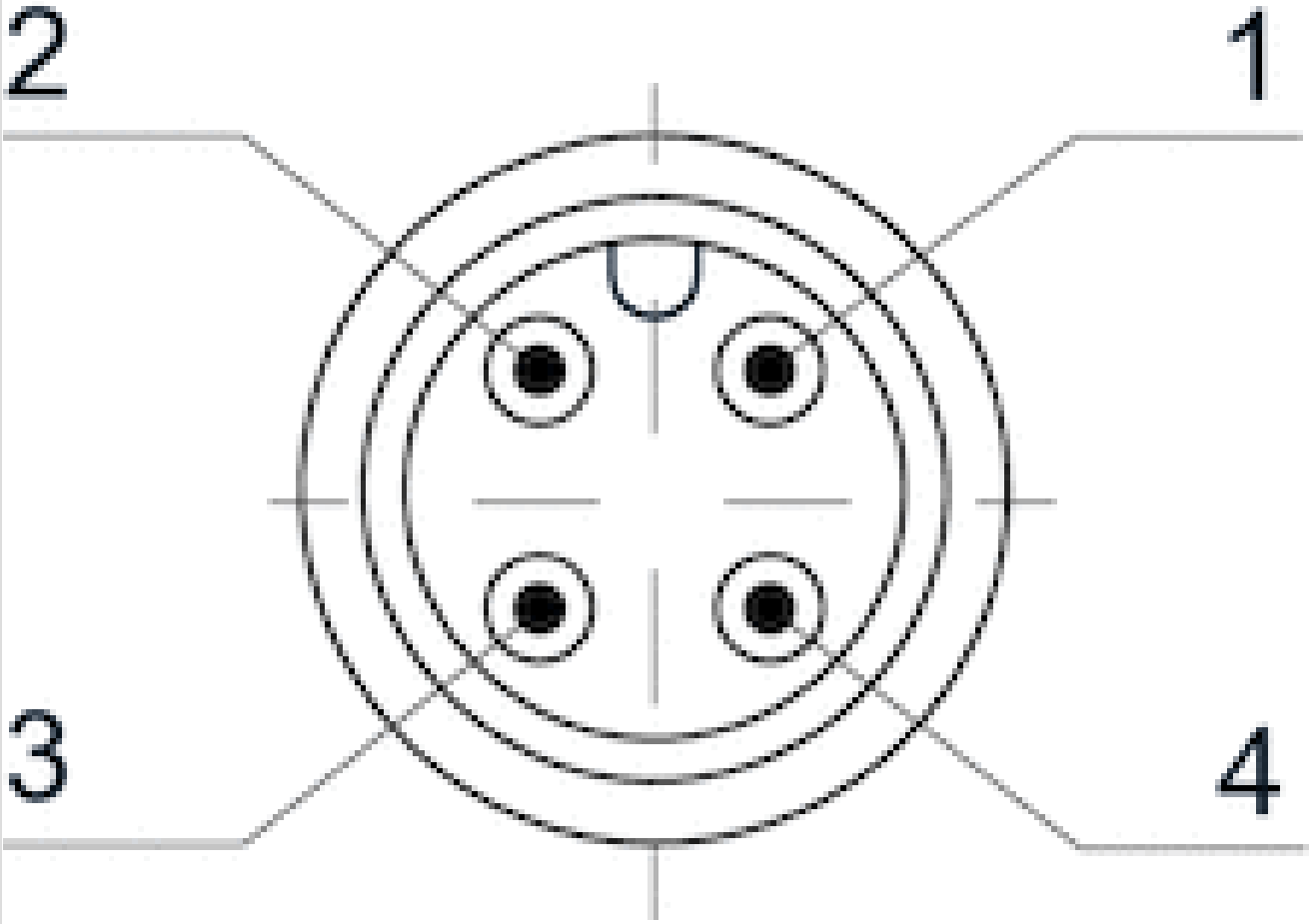

Pin assignments, Socket (female)

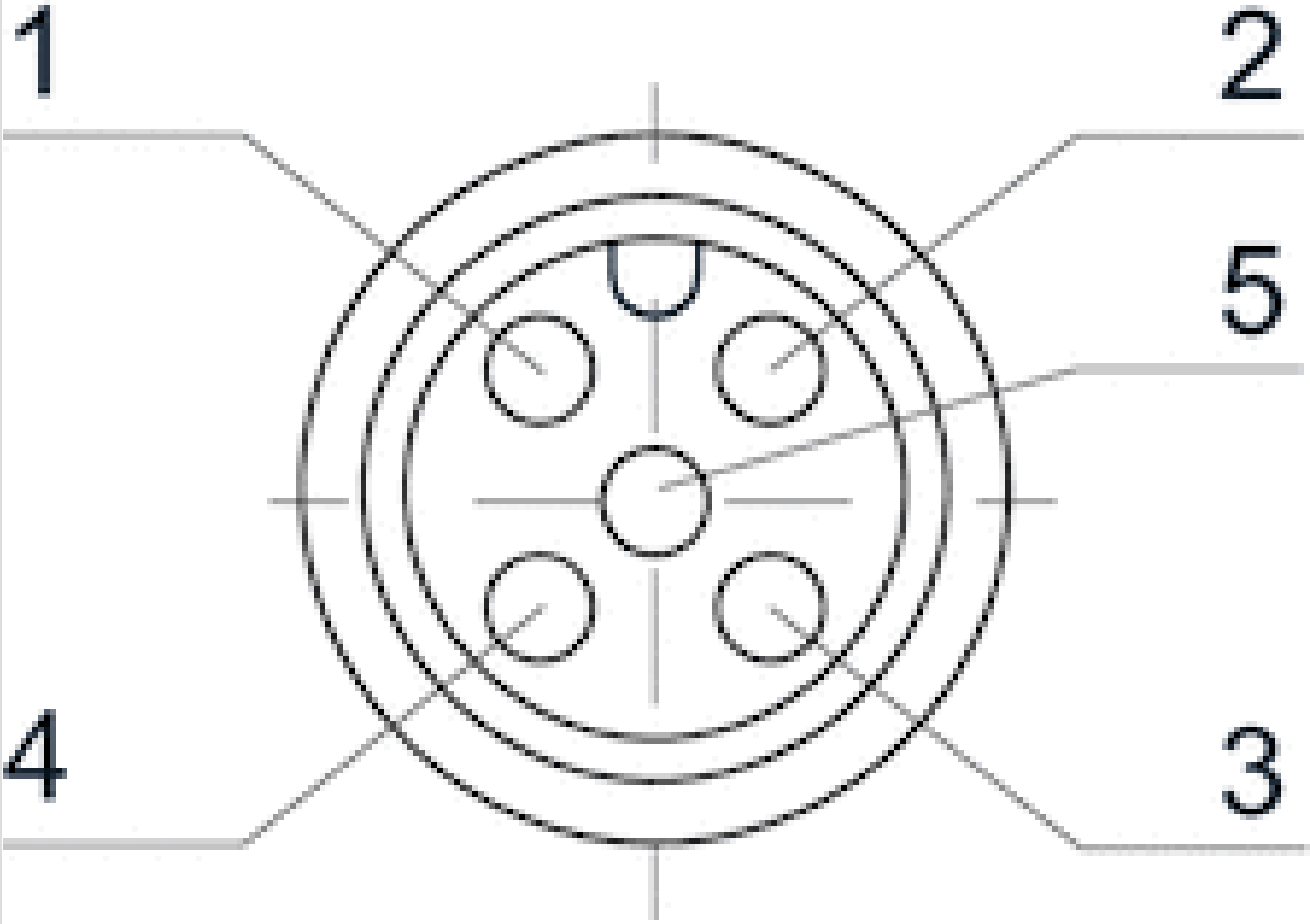

Pin	1	2	3	4
Socket (female) X2A1 - X2A2	24 V DC	Output signal	0 V DC	Input signal
Plug (male) X1S	-	24 V DC	-	0 V DC

5
Shield, connected internally with ground screw 2)
-

Series AES

- Pressure measurement module with 4 compressed air connection

Ambient temperature min./max.	14 ... 140 °F
Protection class	IP65
Generic emission standard in accordance with norm	EN 61000-6-4
Generic immunity standard in accordance with norm	EN 61000-6-2
Weight	0.254 lbs

Technical data

Part No.	Type	Port size	Number of inputs	Measurement range	Measurement range
				min.	max.
R412018291	4P4D4	D4	4	0 bar	10 bar
R412018292	4VP4D4	D4	4	-1 bar	1 bar

Technical information

When using polyurethane tubing, we recommend using additional stiffener sleeves.
For push-in fittings, only use plug accessories made of plastic (polyamide) from our catalog.
The pressure dew point must be at least 27 °F under ambient and medium temperature and may not exceed 5.4 °F .

Technical information

Material	
Housing	Polyamide fiber-glass reinforced

Dimensions

Dimensions

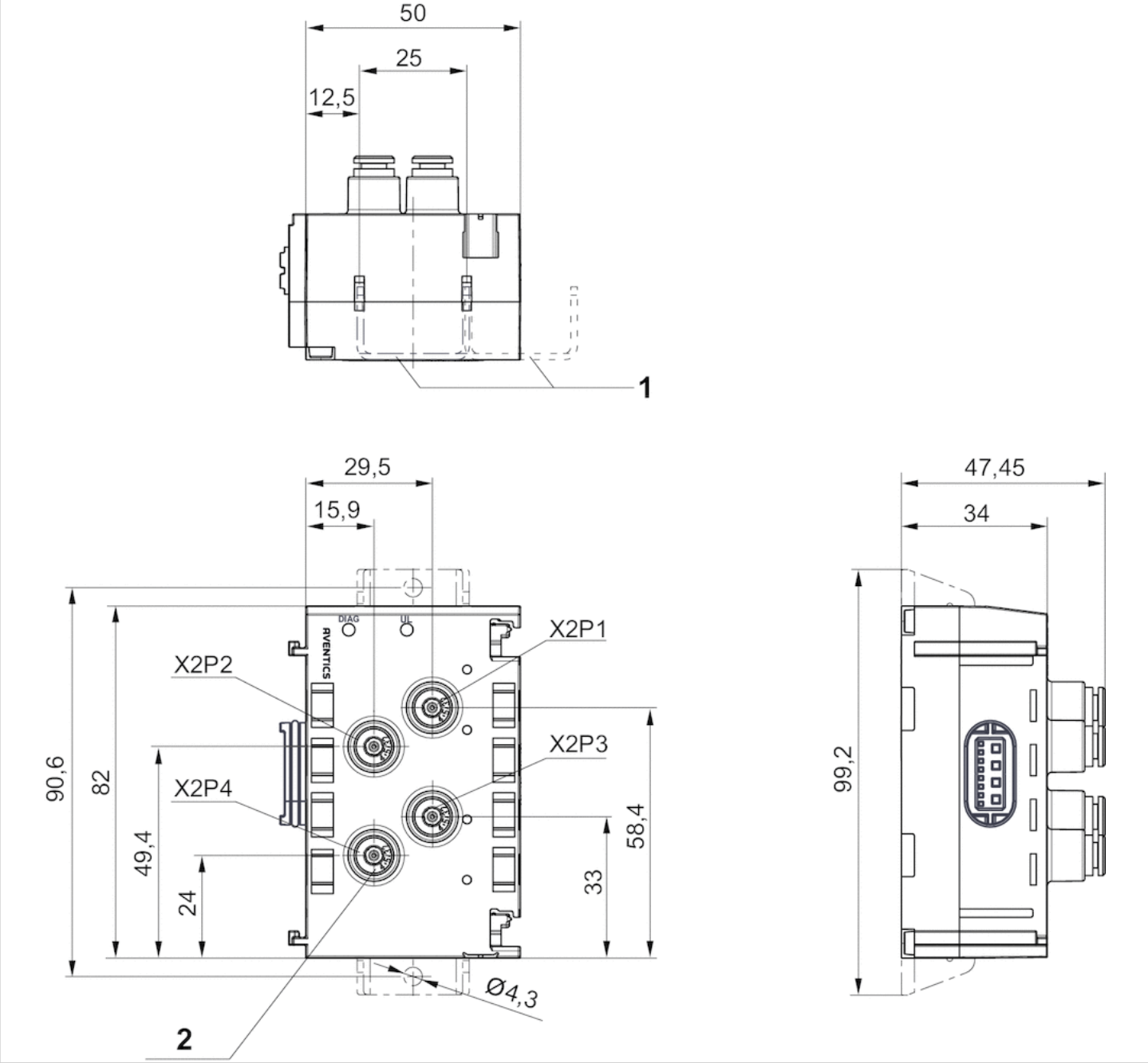

1) Retaining bracket (optional)
2) Blanking plug included in scope of delivery

Distributor, Series AES

- 4x passive distributor, M12x1, 8-pin / 4x M8x1, 3-pin
- Plug (male), M12x1, 8-pin

Ambient temperature min./max.	-22 ... 176 °F
Operational voltage electronics	24 V DC
Power consumption electronics	2 A
Protection class	IP67
Weight	0.154 lbs

Technical data

Part No.	Type	Port	Port
		1	2
R402001810	16DI4M12 16DI8M8	Plug (male), M12x1, 8-pin	Socket (female), M8x1, 3-pin

Technical information

Material	
Housing	Polyamide

Dimensions

Dimensions

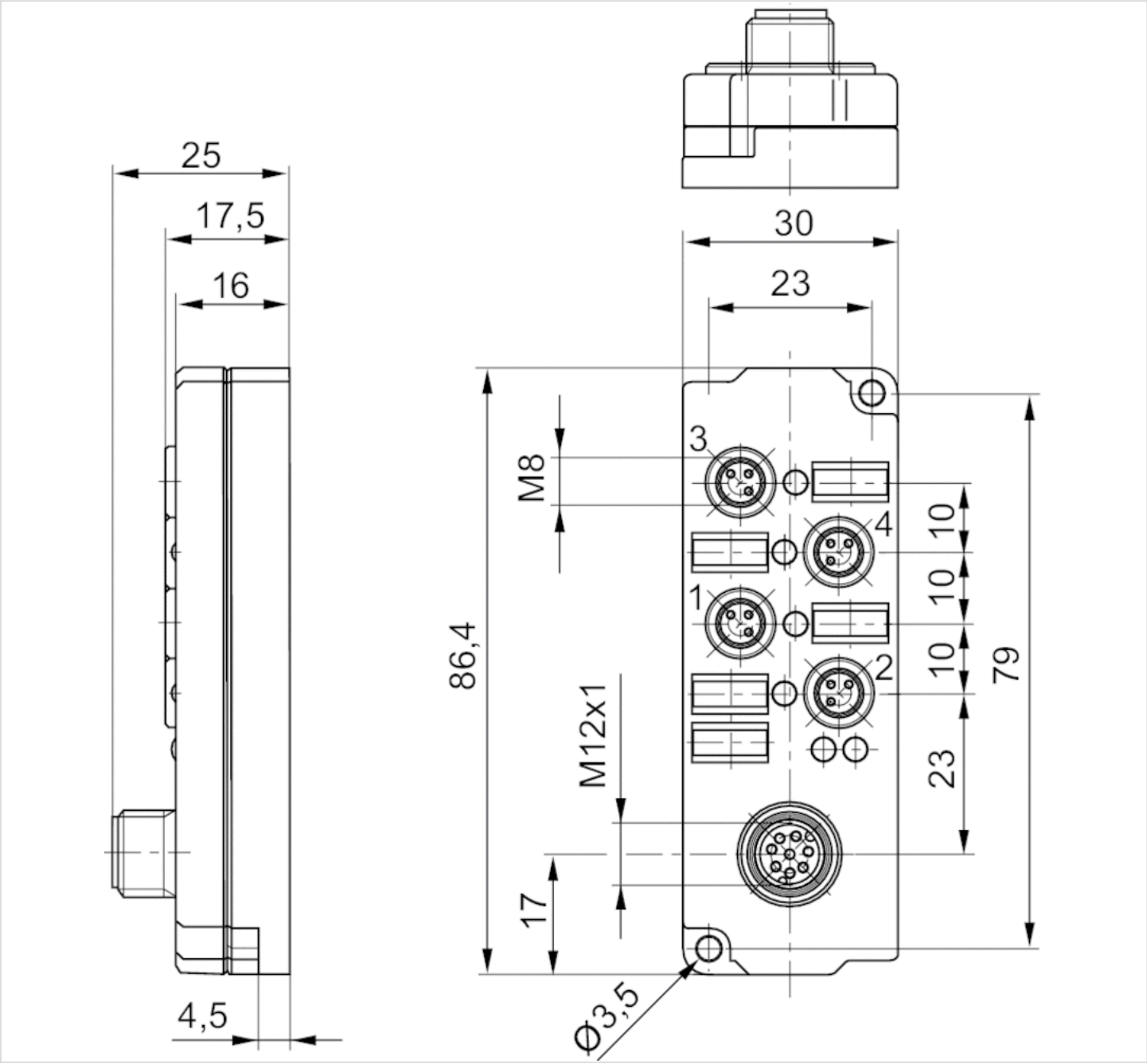

Series AES

- power supply, M12 plug, 4-pin
- Power module
- Plug, M12x1, 4-pin

Version	Power module
Ambient temperature min./max.	14 ... 140 °F
Operational voltage electronics	24 V DC
Electronics voltage tolerance	-20% / +20%
Operating voltage, actuators	24 V DC
Actuator voltage tolerance	-10% / +10%
Total current for actuators	4 A
Protection class	IP65
Total current of sensors max.	4 A
Generic emission standard in accordance with norm	EN 61000-6-4
Generic immunity standard in accordance with norm	EN 61000-6-2
Weight	0.331 lbs

Technical data

Part No.	Port	Power supply direction	Power supply direction
	1	UL	UA
R412018267	Plug, M12x1, 4-pin	-	left
R412018268	Plug, M12x1, 4-pin	left	-

UL: Logic voltage (power supply for electronic components and sensors), UA: Actuator voltage (power supply for valves and outputs), The supply voltage is galvanically isolated from the right-hand module.

Technical information

You will find assignment schemes for the product in the operating instructions, or contact the nearest AVENTICS sales office.

Technical information

Material	
Housing	Polyamide fiber-glass reinforced

Dimensions

Dimensions

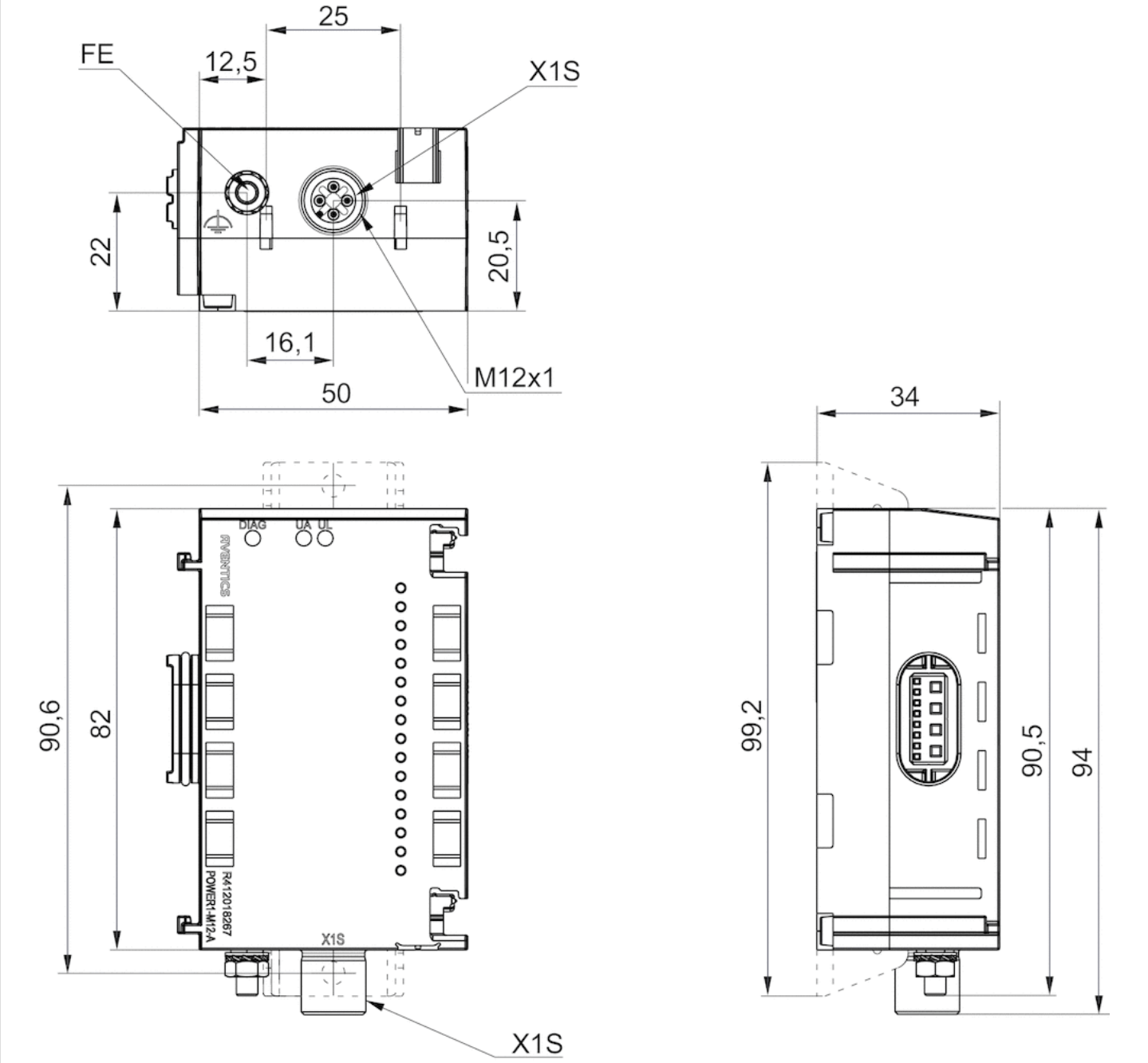

Port 1, X1S

Pin assignments

Pin assignments, PNP

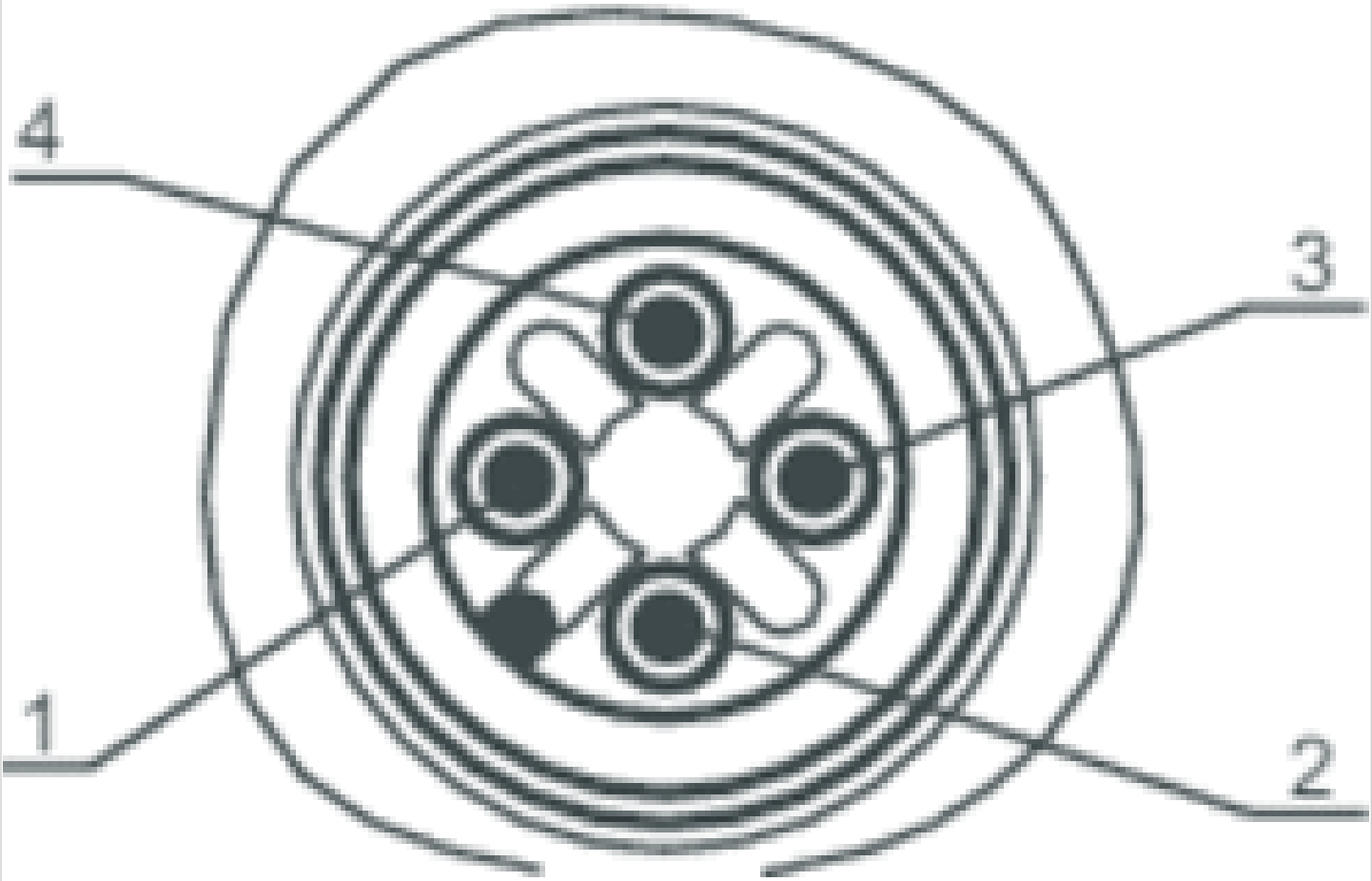

Pin	1
R412018267 (UA)	-
R412018267 (UL)	24 V DC power supply (UL) input

2	3	4
24 V DC power supply (UA) input	-	0 V DC (UA)
-	0 V DC (UL)	-

Series AES

- power supply 7/8″, 5-pin
- Power module
- Plug, 7/8″-16UNF, 5-pin

Version	Power module
Ambient temperature min./max.	14 ... 140 °F
Operational voltage electronics	24 V DC
Electronics voltage tolerance	-20% / +20%
Operating voltage, actuators	24 V DC
Actuator voltage tolerance	-10% / +10%
Total current for actuators	4 A
Protection class	IP65
Total current of sensors max.	4 A
Generic emission standard in accordance with norm	EN 61000-6-4
Generic immunity standard in accordance with norm	EN 61000-6-2
Weight	0.331 lbs

Technical data

Part No.	Port	Port	Power supply direction
	1	2	UL
R412018272	Plug, 7/8″-16UNF, 5-pin	Socket, 7/8″-16UNF, 5-pin	left, right
R412018273	Plug, 7/8″-16UNF, 5-pin	Socket, 7/8″-16UNF, 5-pin	-
R412018274	Plug, 7/8″-16UNF, 5-pin	Socket, 7/8″-16UNF, 5-pin	left

Part No.	Power supply direction	
	UA	
R412018272	left, right	1)
R412018273	left	2)
R412018274	-	2)

UL: Logic voltage (power supply for electronic components and sensors), UA: Actuator voltage (power supply for valves and outputs), If connection 2 is not used for forwarding, it must be closed with sealing cap R412024838.

1) Power plug X1S on the bus coupler must be closed with sealing cap R412024837.

2) The supply voltage is galvanically isolated from the right-hand module.

Technical information

You will find assignment schemes for the product in the operating instructions, or contact the nearest AVENTICS sales office.
The supply voltage from X1S1 is available at X1S2 (without modification)
The total internal current (UA or UL) and consumption at X1S2 must not exceed 8A at X1S1.

Technical information

Material	
Housing	Polyamide fiber-glass reinforced

Dimensions

Dimensions

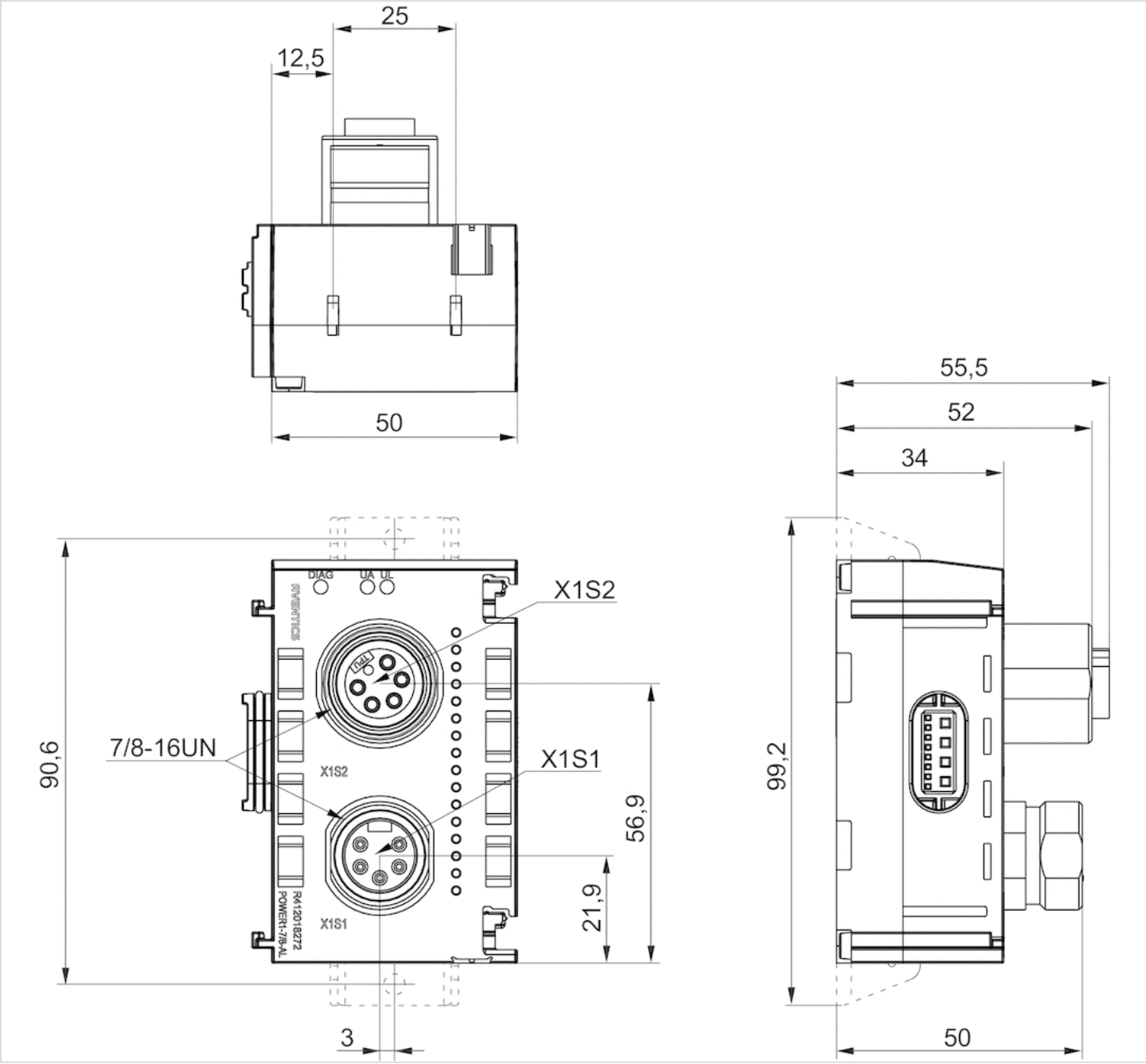

Port 1, X1S1
Port 2, X1S2

Pin assignments

Pin assignments, PNP

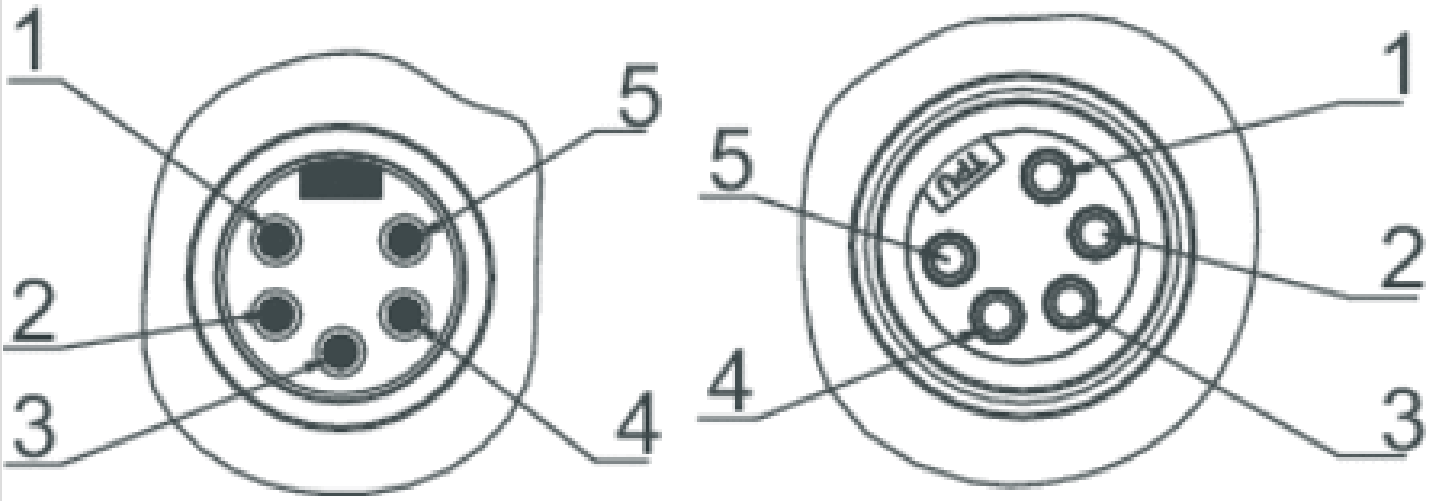

Pin	1	2	3
Plug X1S1	0 V DC (UA)	0 V DC (UL)	FE
Socket X1S2	0 V DC (UA)	0 V DC (UL)	FE

4	5
24 V DC power supply (UL) input	24 V DC power supply (UA) input
24 V DC power supply (UL) output	24 V DC power supply (UA) output

Exhaust module, Stand-Alone

- Pneumatically operated

Working pressure min./max.	0 ... 145 psi
Ambient temperature min./max.	14 ... 140 °F
Medium	Compressed air
Weight	0.176 lbs

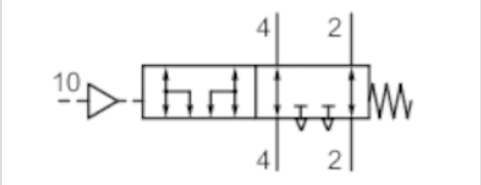

Technical data

Part No.	Port 1 Input	Compressed air connection Output	Flow Qn
R422003188	Ø 4	Ø 4	0.284 Cv
R422003186	Ø 6	Ø 6	0.732 Cv
R422003118	Ø 8	Ø 8	1.1 Cv

Technical information

When using polyurethane tubing, we recommend using additional stiffener sleeves.
Particularly suitable for 5/3 CC valves, since the remaining pressure in the actuator can be exhausted when the control pressure is applied.
The exhaust module and the air circuit should be tested monthly to ensure they function correctly.
Applications with vertical actuators with exhaust or pressure throttles and a maximum load of 15 kg as well as up to a speed of Vmax 33 mm/s .

Technical information

Material	
Housing	Aluminum
Seals	Nitrile rubber

Dimensions

Dimensions

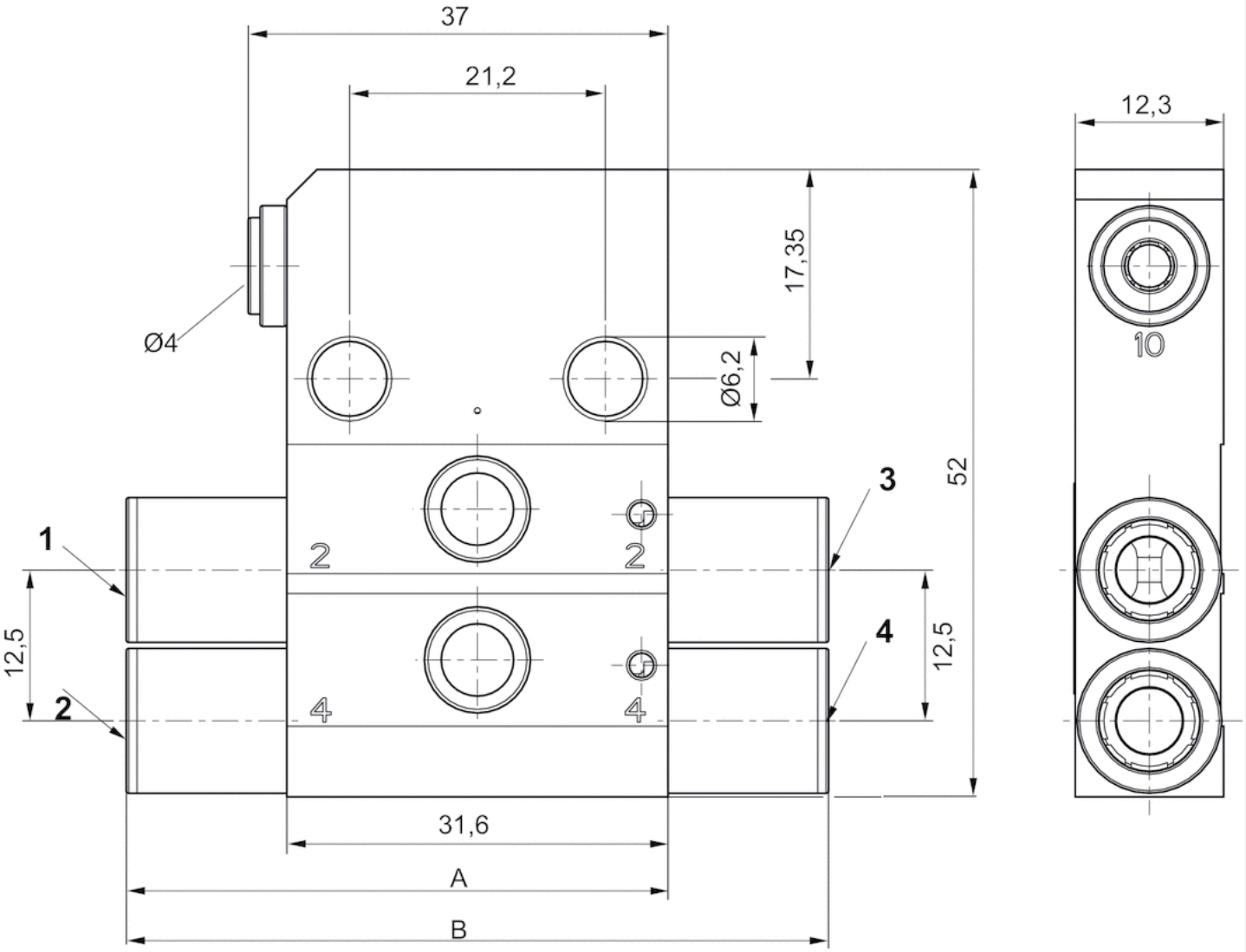

1) Connection 2, valve side
2) Connection 4, valve side
3) Operating line 2
4) Operating line 4

Dimensions

Part No.	2 (Nl/min±15%)	4 (Nl/min±15%)	A	B
R422003188	280	300	38	42
R422003186	720	790	42	50
R422003118	1080	1400	46	58

Diagrams

Minimum control pressure (depending on operating pressure)

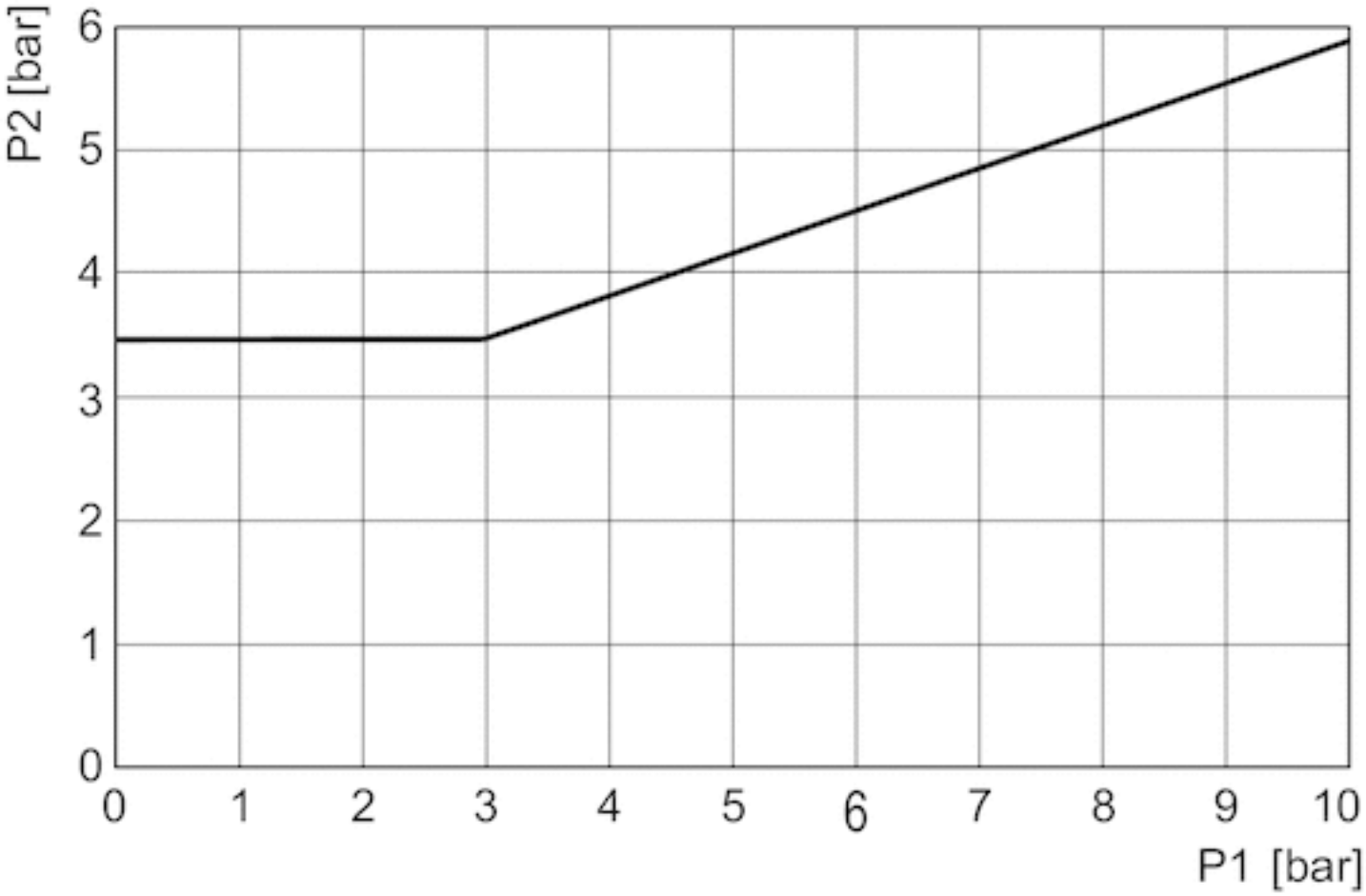

p1 = pressure on connections 2 and 4, p2 = control pressure

Pressure regulator subplate, Series HF04

- for series HF04, HF04-XF, LP04
- Poppet valve

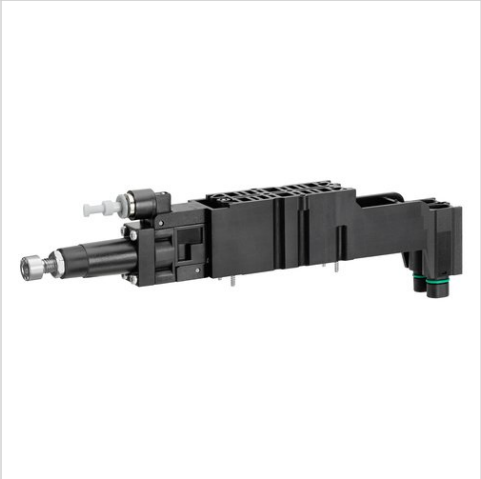

Type	Poppet valve
Working pressure min./max.	8 ... 145 psi
Adjustment range min./max.	See table below
Ambient temperature min./max.	23 ... 122 °F
Medium temperature min./max.	32 ... 122 °F
Medium	Compressed air
Max. particle size	5 µm
Oil content of compressed air	0 ... 5 mg/m³
Weight	0.22 lbs

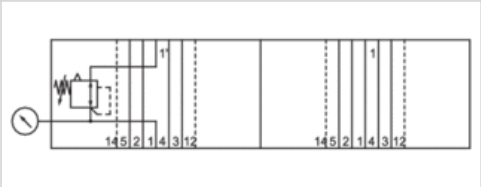

Technical data

Part No.	Adjustment range min./max.	Fig.
R412000999	8 ... 116 psi	Fig. 1
R412008584	8 ... 58 psi	Fig. 2

Pressure gauge, 0-1 MPa, with 4 mm push-in fitting.

Technical information

Protection class when mounted: IP65
Please note that HF04 and LP03 series valve systems can only be retrofitted without conversion from 05/2008 onwards. Older valve systems do not have the required mounting holes in the subbases.

Technical information

Material	
Housing	Polyamide
Seals	Acrylonitrile butadiene rubber

Dimensions

Dimensions

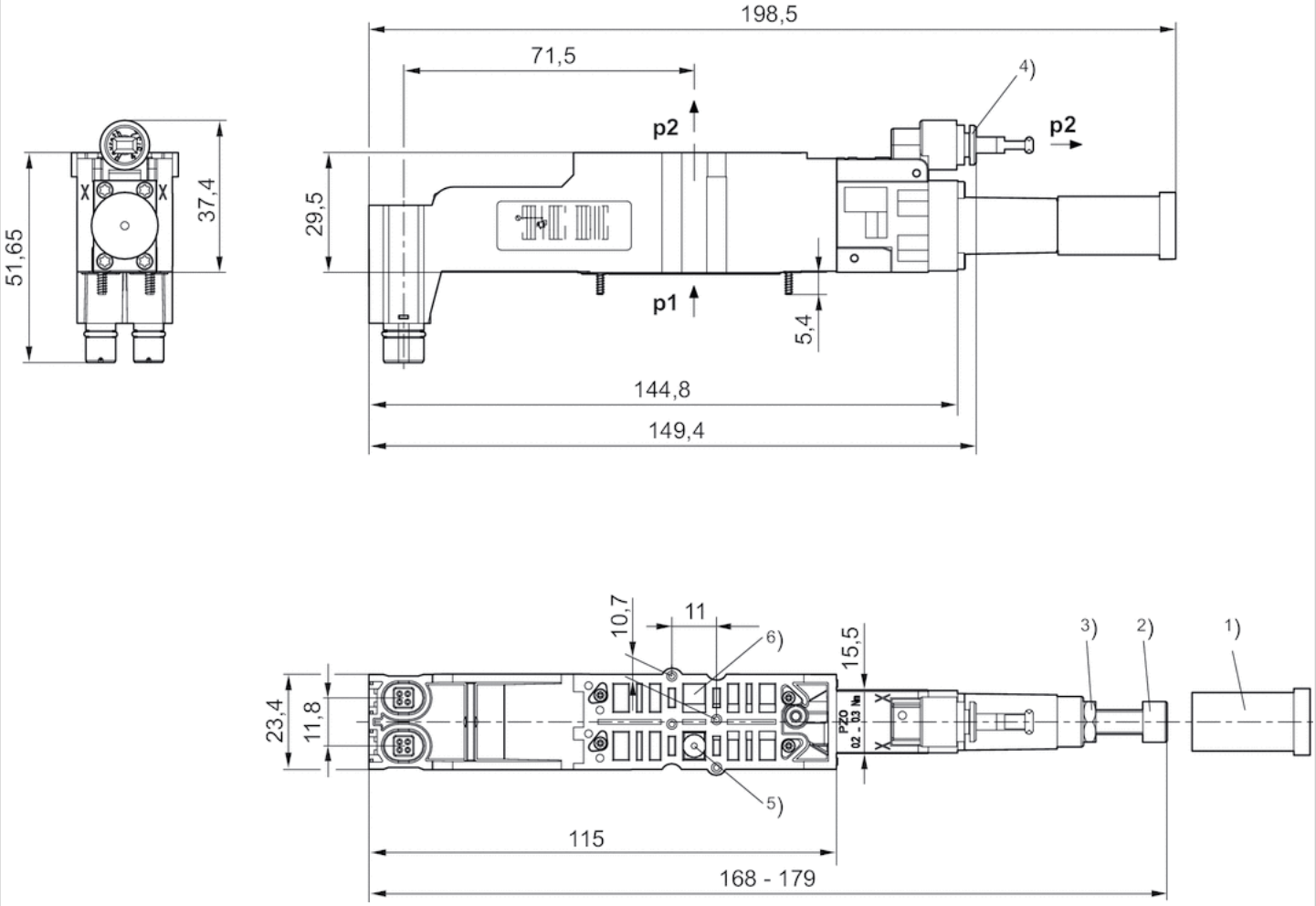

1) Locking cap 2) Regulating screw 3) Lock nut 4) Push-in fitting
p1 = working pressure p2 = secondary pressure
5) Valve position is controlled by the pressure regulator subplate
6) Valve position is directly supplied via channel 1 of the valve system

Diagrams

Fig. 1

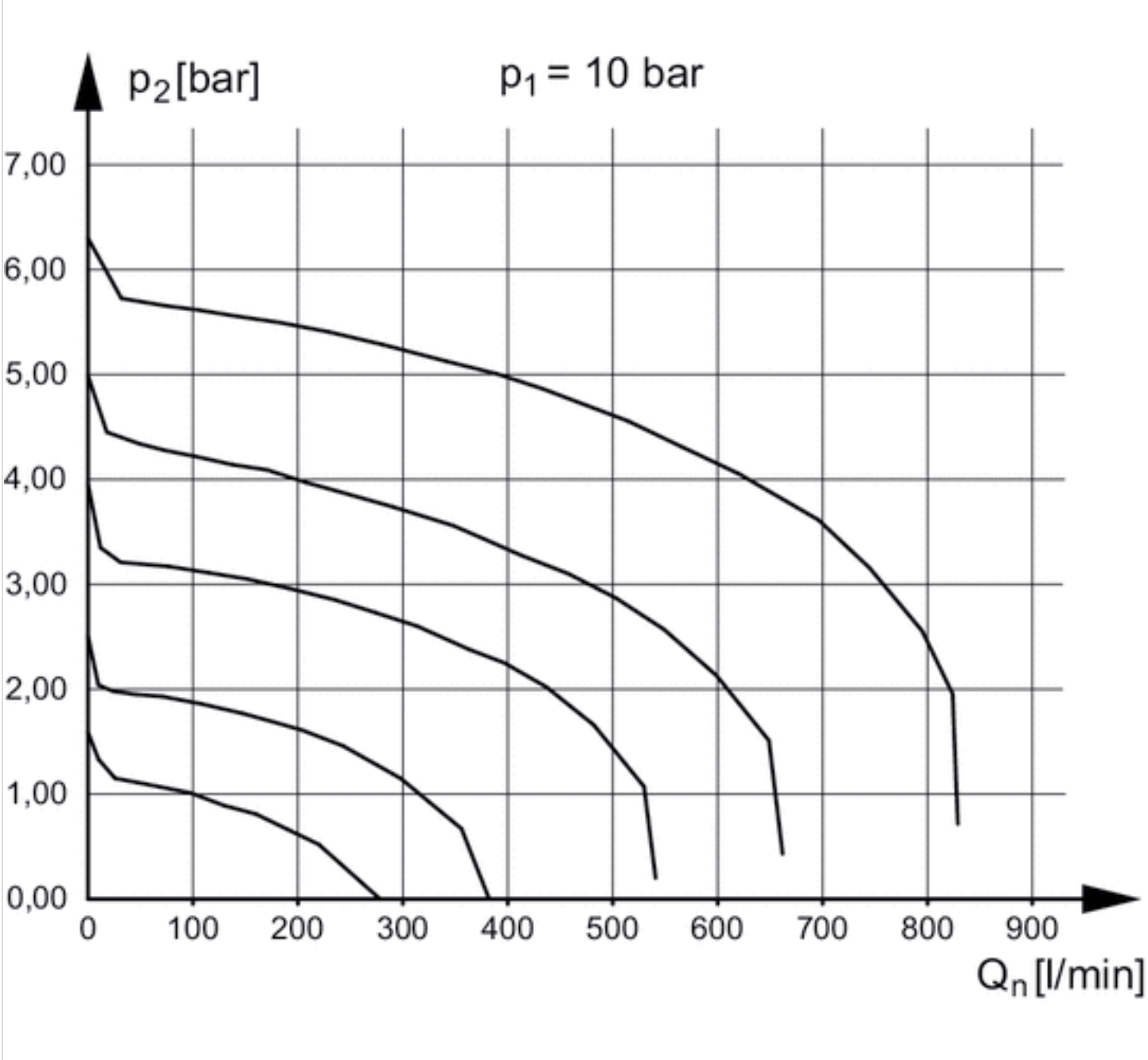

p1 = Working pressure
p2 = Secondary pressure
qn = Nominal flow

Fig. 2

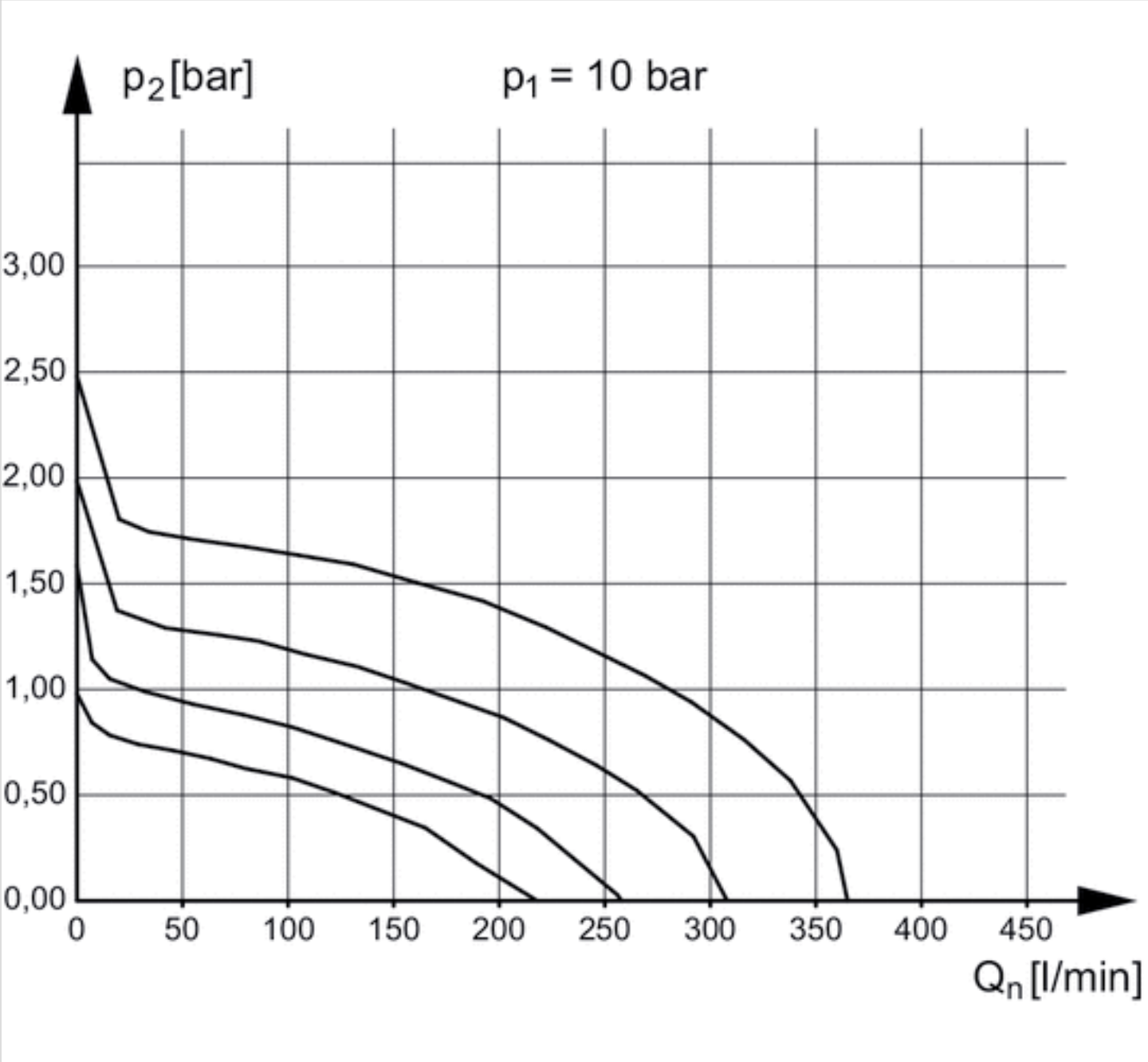

p1 = Working pressure
p2 = Secondary pressure
qn = Nominal flow

Pressure gauge, Series PG1-ROB

- Back port
- Background color Black
- Scale color White
- Viewing window Polystyrene
- Units MPa

Type	Bourdon tube pressure gauge
Medium	Compressed air Compressed air
Main scale unit (outside)	MPa
Main scale color (outside)	White
Background color	Black
Pointer color	Red
Weight	0.022 lbs

Technical data

Part No.	Compressed air connection	Nominal diameter	Range of application	Display range
R412009413	Ø 4	0.59 inch	0 ... 10 bar	0 ... 10 bar

Technical information

Material	
Housing	Acrylonitrile butadiene styrene
Thread	Brass
Viewing window	Polystyrene
Seal	Polytetrafluorethylene

Dimensions

Dimensions in mm

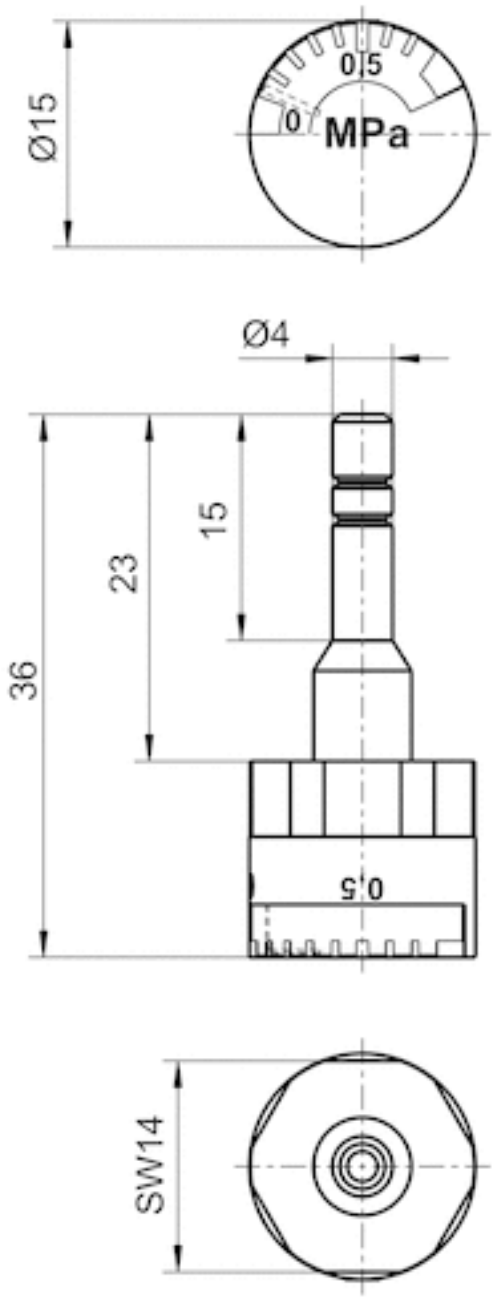

CKD kit, Series HF04

- Compressed air connection output Ø 6 M7
- Can be assembled into blocks
- Double base plate principle
- Reversed pressure supply permissible
- Bus module extension possible
- I/O extension possible
- With collective pilot air exhaust
- D-Sub plug, 25-pin, on the side Link structure CMS

Type	Multipole
Working pressure min./max.	See table below
Ambient temperature min./max.	23 ... 122 °F
Medium temperature min./max.	32 ... 122 °F
Medium	Compressed air
electr. connection	D-Sub plug, 25-pin, on the side Link structure CMS
Number of valve positions max.	2
Grid dimension	0.46 inch
Rail mounting DIN EN 60715	TH35 x 15
Exhaust (3,5)	With directional exhaust (3/5)
Exhaust type	Ports separated
Mounting screw	cross recessed DIN EN ISO 4757-Z0
Tightening torque for mounting screws	0.15 ft./lbs.

Technical data

Part No.	Type	electrical connections
R412008545	Base plate for a single or double solenoid valve	Plug, D-Sub, 25-pin
R412008546	Base plate for a single or double solenoid valve	Plug, D-Sub, 25-pin
R412008547	Base plate for a single or double solenoid valve	Plug, D-Sub, 25-pin
R412008548	Base plate for a single or double solenoid valve	Plug, D-Sub, 25-pin

Part No.	Compressed air connection Input [1]	Compressed air connection Output [2 / 4]
R412008545	Ø 8	Ø 6
R412008546	Ø 8	Ø 6
R412008547	Ø 8	M7
R412008548	Ø 8	M7

Part No.	Compressed air connection Exhaust [3 / 5]	Compressed air connection Pilot connection [12]
R412008545	Ø 10	-
R412008546	Ø 10	Ø 6
R412008547	Ø 10	-
R412008548	Ø 10	Ø 6

Part No.	Compressed air connection Pilot control exhaust [R]	Working pressure min./max.	Pilot
R412008545	Ø 6	44 ... 116 psi	Internal
R412008546	Ø 6	-13 ... 145 psi	External
R412008547	Ø 6	44 ... 116 psi	Internal
R412008548	Ø 6	-13 ... 145 psi	External

Part No.	DC operating voltage	Voltage tolerance DC
R412008545	24 V	-10% / +10%
R412008546	24 V	-10% / +10%
R412008547	24 V	-10% / +10%
R412008548	24 V	-10% / +10%

1 = plug-in connection Ø 8 mm↩2 and 4 = plug-in connection Ø 6 mm or thread connections M7↩3 and 5 = plug-in connection Ø 10 mm↩R = collected pilot exhaust, plug-in connection Ø 6 mm↩X = external pilot, plug-in connection Ø 6 mm, connection X plugged with internal pilot control

Technical information

The min. control pressure must be adhered to, since otherwise faulty switching and valve failure may result!
The pressure dew point must be at least 27 °F under ambient and medium temperature and may not exceed 5.4 °F .
The oil content of compressed air must remain constant during the life cycle.
Use only the approved oils from AVENTICS. Further information can be found in the “Technical information” document (available in the MediaCentre).

Double base plate principle

Technical information

Material	
Base plate	Polyamide
push-in fitting	Brass, nickel-plated
Seal	Acrylonitrile butadiene rubber
Screws	Steel
Tie-rods	Aluminum

CKD kit, Series HF04

- Inch version
- Compressed air connection output M7
- Can be assembled into blocks
- Double base plate principle
- Reversed pressure supply permissible
- Bus module extension possible
- I/O extension possible
- With collective pilot air exhaust
- D-Sub plug, 25-pin, on the side Link structure CMS

Type	Multipole
Working pressure min./max.	See table below
Ambient temperature min./max.	23 ... 122 °F
Medium temperature min./max.	32 ... 122 °F
Medium	Compressed air
electr. connection	D-Sub plug, 25-pin, on the side Link structure CMS
Number of valve positions max.	2
Grid dimension	0.46 inch
Rail mounting DIN EN 60715	TH35 x 15
Exhaust (3,5)	With directional exhaust (3/5)
Exhaust type	Ports separated
Mounting screw	cross recessed DIN EN ISO 4757-Z0
Tightening torque for mounting screws	0.15 ft./lbs.

Technical data

Part No.	Type	electrical connections
R412008549	Base plate for a single or double solenoid valve	Plug, D-Sub, 25-pin
R412008550	Base plate for a single or double solenoid valve	Plug, D-Sub, 25-pin

Part No.	Compressed air connection Input [1]	Compressed air connection Output [2 / 4]
R412008549	3/8″	M7
R412008550	3/8″	M7

Part No.	Compressed air connection Exhaust [3 / 5]	Compressed air connection Pilot connection [12]
R412008549	3/8″	-
R412008550	3/8″	Ø 1/4″

Part No.	Compressed air connection Pilot control exhaust [R]	Working pressure min./max.	Pilot
R412008549	Ø 1/4″	44 ... 116 psi	Internal
R412008550	Ø 1/4″	-13 ... 145 psi	External

Part No.	DC operating voltage	Voltage tolerance DC
R412008549	24 V	-10% / +10%
R412008550	24 V	-10% / +10%

1 = plug-in connection 3/8" (inch)↩2 and 4 = thread connections M7↩3 and 5 = plug-in connection 3/8" (inch)↩R = collected pilot exhaust, plug-in connection 1/4" (inch)↩X = external pilot, plug-in connection 1/4" (inch), connection X plugged with internal pilot control

Technical information

The min. control pressure must be adhered to, since otherwise faulty switching and valve failure may result!
The pressure dew point must be at least 27 °F under ambient and medium temperature and may not exceed 5.4 °F .
The oil content of compressed air must remain constant during the life cycle.
Use only the approved oils from AVENTICS. Further information can be found in the “Technical information” document (available in the MediaCentre).

Double base plate principle

Technical information

Material	
Base plate	Polyamide
push-in fitting	Brass, nickel-plated
Seal	Acrylonitrile butadiene rubber
Screws	Steel
Tie-rods	Aluminum

CKD kit, Series HF04-XF

- Compressed air connection output Ø 6
- Can be assembled into blocks
- Double base plate principle
- Reversed pressure supply permissible
- Bus module extension possible
- I/O extension possible
- With collective pilot air exhaust
- D-Sub plug, 44-pin, on the side Link structure CMS

Type	Multipole
Working pressure min./max.	See table below
Ambient temperature min./max.	23 ... 122 °F
Medium temperature min./max.	32 ... 122 °F
Medium	Compressed air
electr. connection	D-Sub plug, 44-pin, on the side Link structure CMS
Number of valve positions max.	2
Grid dimension	0.46 inch
Rail mounting DIN EN 60715	TH35 x 15
Exhaust (3,5)	With directional exhaust (3/5)
Exhaust type	Ports separated
Mounting screw	cross recessed DIN EN ISO 4757-Z0
Tightening torque for mounting screws	0.15 ft./lbs.

Technical data

Part No.	Type	electrical connections
R412012796	Base plate for a single or double solenoid valve	Plug, D-Sub, 44-pin
R412012797	Base plate for a single or double solenoid valve	Plug, D-Sub, 44-pin

Part No.	Compressed air connection Input [1]	Compressed air connection Output [2 / 4]
R412012796	Ø 8	Ø 6
R412012797	Ø 8	Ø 6

Part No.	Compressed air connection Exhaust [3 / 5]	Compressed air connection Pilot connection [12]
R412012796	Ø 10	-
R412012797	Ø 10	Ø 6

Part No.	Compressed air connection Pilot control exhaust [R]	Working pressure min./max.	Pilot
R412012796	Ø 6	44 ... 116 psi	Internal
R412012797	Ø 6	-13 ... 145 psi	External

Part No.	DC operating voltage	Voltage tolerance DC
R412012796	24 V	-10% / +10%
R412012797	24 V	-10% / +10%

1 = plug-in connection Ø 8 mm↩2 and 4 = plug-in connection Ø 6 mm or thread connections M7↩3 and 5 = plug-in connection Ø 10 mm↩R = collected pilot exhaust, plug-in connection Ø 6 mm↩X = external pilot, plug-in connection Ø 6 mm, connection X plugged with internal pilot control

Technical information

The min. control pressure must be adhered to, since otherwise faulty switching and valve failure may result!
The pressure dew point must be at least 27 °F under ambient and medium temperature and may not exceed 5.4 °F .
The oil content of compressed air must remain constant during the life cycle.
Use only the approved oils from AVENTICS. Further information can be found in the “Technical information” document (available in the MediaCentre).

Double base plate principle

Technical information

Material	
Base plate	Polyamide
push-in fitting	Brass, nickel-plated
Seal	Acrylonitrile butadiene rubber
Screws	Steel
Tie-rods	Aluminum

Blanking plate, Series HF04

Working pressure min./max.	-13 ... 145 psi
Ambient temperature min./max.	23 ... 122 °F
Medium	Compressed air
Mounting screw	cross recessed DIN EN ISO 4757-Z0
Tightening torque for mounting screws	0.15 ft./lbs.
Weight	0.181 lbs

Technical data

Part No.	Type	Delivery unit
1825700104	Blanking plate, incl. sealing kit, 2x mounting screws	1 piece

Technical information

The min. control pressure must be adhered to, since otherwise faulty switching and valve failure may result!
The pressure dew point must be at least 27 °F under ambient and medium temperature and may not exceed 5.4 °F .
The oil content of compressed air must remain constant during the life cycle.
Use only the approved oils from AVENTICS. Further information can be found in the “Technical information” document (available in the MediaCentre).

Technical information

Material	
Base plate	Polyamide
Seal	Nitrile rubber

Dimensions

Dimensions

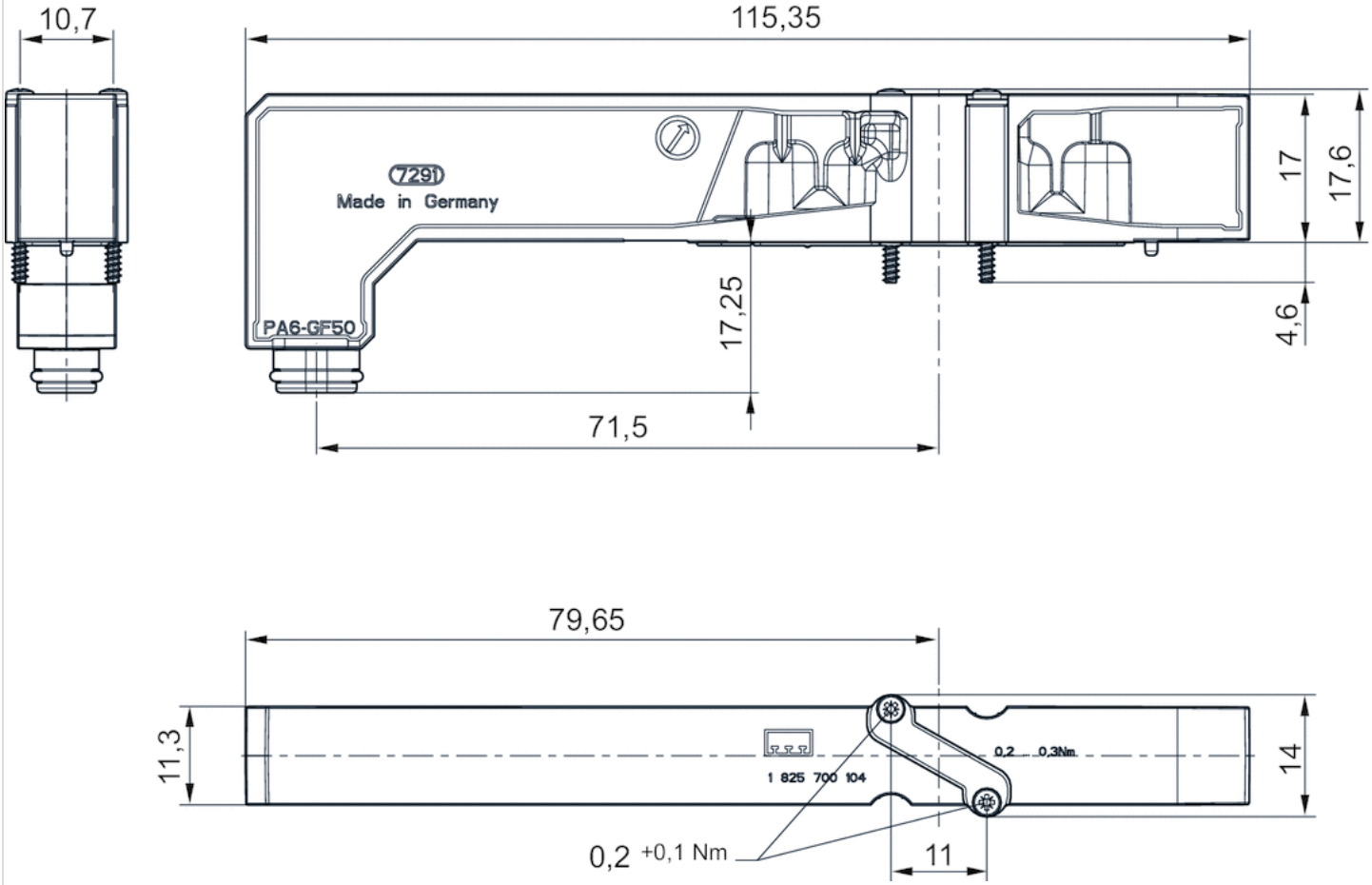

base plates

- for HF04

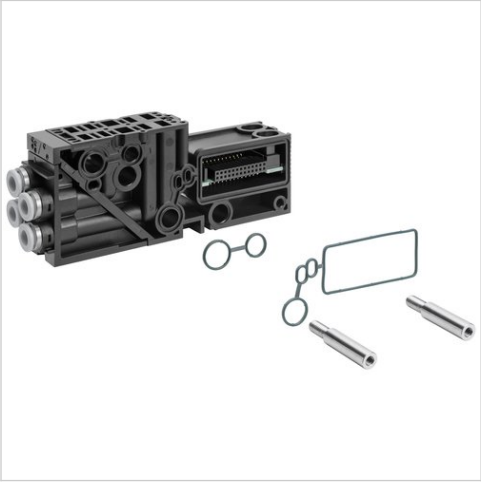

Weight See table below

Technical data

Part No.	Type	Scope of delivery	Delivery unit
1827010708	HF04	"Base plate for 2 double solenoid valves, push-in fitting Ø6 mm, 2 tie rod extensions, and 1 sealing kit "	1 piece
R412004053	HF04	Base plate for 2 double solenoid valves, thread connection M7, 2 tie rod extensions, and 1 sealing kit	1 piece
R412006823	HF04	Base plate for 2 single solenoid valves, push-in fitting Ø6 mm, 2 tie rod extensions, and 1 sealing kit	1 piece
R412006824	HF04	Base plate for 2 single solenoid valves, M7 thread connection, 2 tie rod extensions, and 1 sealing kit	1 piece

Part No.	Weight
1827010708	0.278 lbs
R412004053	0.286 lbs
R412006823	0.269 lbs
R412006824	0.286 lbs

Technical information

The min. control pressure must be adhered to, since otherwise faulty switching and valve failure may result!
The pressure dew point must be at least 27 °F under ambient and medium temperature and may not exceed 5.4 °F .
The oil content of compressed air must remain constant during the life cycle.
Use only the approved oils from AVENTICS. Further information can be found in the “Technical information” document (available in the MediaCentre).

QR1-S-RBS standard series

- Blanking plug
- pin bushing
- Ø 6 Ø 8 Ø 10
- QR1-S-RBS

Working pressure min./max.	-13 ... 145 psi
Ambient temperature min./max.	32 ... 140 °F
Weight per piece	See table below

Technical data

Part No.	Port G	Delivery unit	Weight per piece
2123206000	Ø 6	20 piece	0.002 lbs
2123208000	Ø 8	20 piece	0.003 lbs
2123210000	Ø 10	20 piece	0.004 lbs

Technical information

The series QR1 (plastic) and QR2 (metal) can not be combined

For further information about assembling and tolerances of adaptable tubing can be found in the “Technical information” document (available in the MediaCentre).

Technical information

Material	
Material	nickel-plated
Housing	Polybutyleneterephthalate

Dimensions

Dimensions

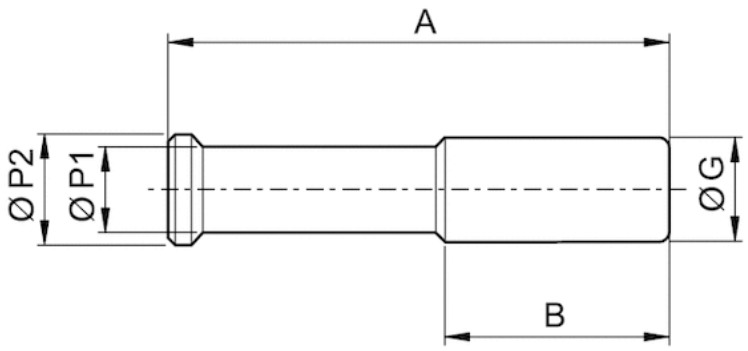

Dimensions

Part No.	Port G	A	B	Ø P1	Ø P2
2123206000	Ø 6	32	17	4	6
2123208000	Ø 8	39	21,5	5	9
2123210000	Ø 10	42	21	8	10

Separator

- for HF04

Weight See table below

Technical data

Part No.	Type	Delivery unit
R412003402	Separators between two double subbases, channel 1	10 piece
R412000998	Separators: between two double subbases, channels 3 and 5	10 piece
R412003404	Separators: between two valve positions, channels 1, 3 and 5	-

Part No.	Weight
R412003402	0.055 lbs
R412000998	0.037 lbs
R412003404	0.064 lbs

Multipole plug, series CON-MP

- open cable ends 25-pin
- with cable
- unshielded

Ambient temperature min./max.	-4 ... 176 °F
Operational voltage	24 V DC
Protection class	IP67
Wire cross-section	0 in²

Technical data

Part No.	Electrical connection	Max. current	Number of wires	Cable sheath
	1			
R419500454	Socket D-Sub 25-pin straight 180°	3 A	25	Polyvinyl chloride
R419500455	Socket D-Sub 25-pin straight 180°	3 A	25	Polyvinyl chloride
R419500456	Socket D-Sub 25-pin straight 180°	3 A	25	Polyvinyl chloride
R412022156	Socket D-Sub 25-pin straight 180°	3 A	25	Polyvinyl chloride
R419500457	Socket D-Sub 25-pin straight 180°	3 A	25	Polyurethane
R419500458	Socket D-Sub 25-pin straight 180°	3 A	25	Polyurethane
R419500459	Socket D-Sub 25-pin straight 180°	3 A	25	Polyurethane
R419500460	Socket D-Sub 25-pin angled 90°	3 A	25	Polyvinyl chloride
R419500461	Socket D-Sub 25-pin angled 90°	3 A	25	Polyvinyl chloride
R419500462	Socket D-Sub 25-pin angled 90°	3 A	25	Polyvinyl chloride
R412022352	Socket D-Sub 25-pin angled 90°	3 A	25	Polyvinyl chloride
R419500463	Socket D-Sub 25-pin angled 90°	3 A	25	Polyurethane
R419500464	Socket D-Sub 25-pin angled 90°	3 A	25	Polyurethane
R419500465	Socket D-Sub 25-pin angled 90°	3 A	25	Polyurethane

Part No.	Cable-Ø	Cable length		Fig.
R419500454	0.33 inch	9.84 ft.	-	Fig. 1
R419500455	0.33 inch	16.4 ft.	-	Fig. 1
R419500456	0.33 inch	32.81 ft.	-	Fig. 1
R412022156	-	-	-	Fig. 1
R419500457	0.41 inch	9.84 ft.	1)	Fig. 1
R419500458	0.41 inch	16.4 ft.	1)	Fig. 1
R419500459	0.41 inch	32.81 ft.	1)	Fig. 1
R419500460	0.33 inch	9.84 ft.	-	Fig. 2
R419500461	0.33 inch	16.4 ft.	-	Fig. 2
R419500462	0.33 inch	32.81 ft.	-	Fig. 2
R412022352	-	-	-	Fig. 2

Part No.	Cable-Ø	Cable length		Fig.
R419500463	0.41 inch	9.84 ft.	1)	Fig. 2
R419500464	0.41 inch	16.4 ft.	1)	Fig. 2
R419500465	0.41 inch	32.81 ft.	1)	Fig. 2

1) suitable for dynamic laying

Technical information

The specified protection class is only valid in assembled and tested state.
The increased wire cross-section of pin 25 is 0.82 mm².

Technical information

Material	
Housing	Thermoplastic elastomer
Cable sheath	Polyvinyl chloride Polyurethane

Dimensions

Fig. 1

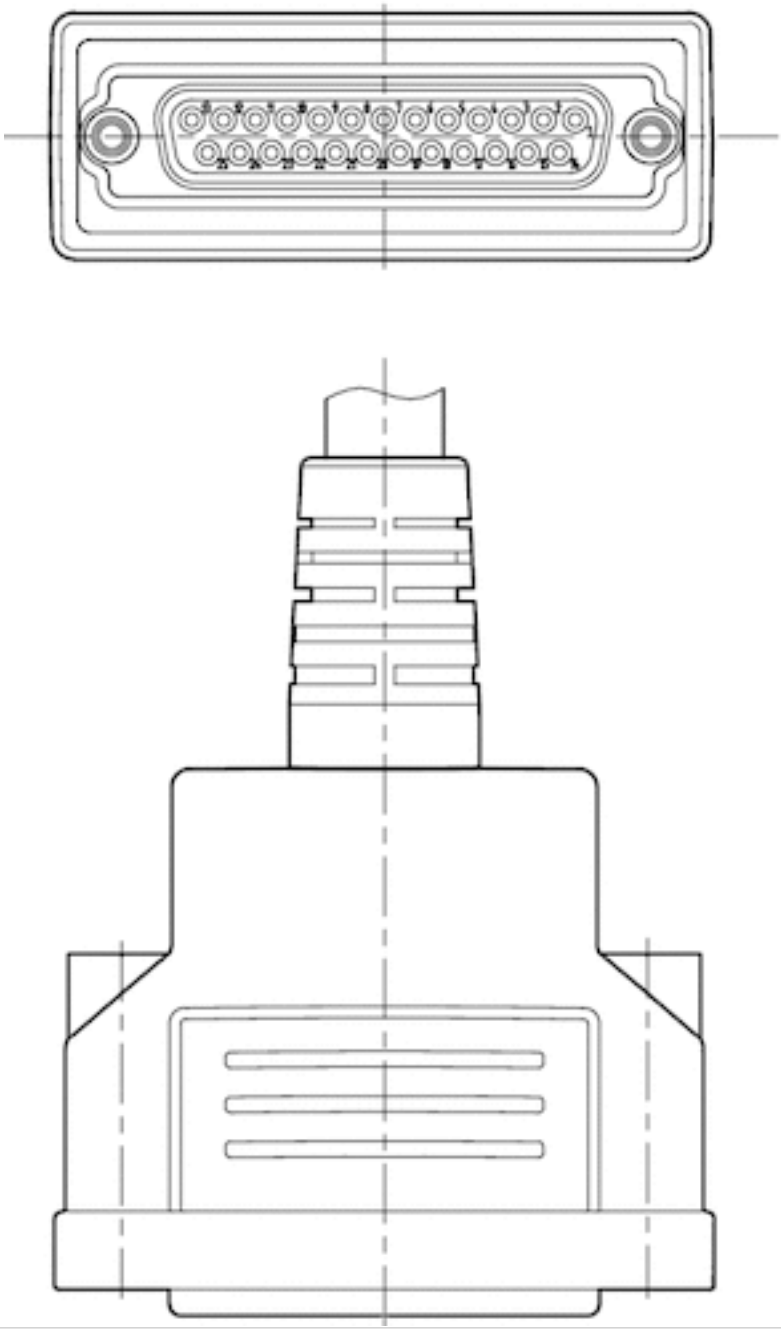

Fig. 2

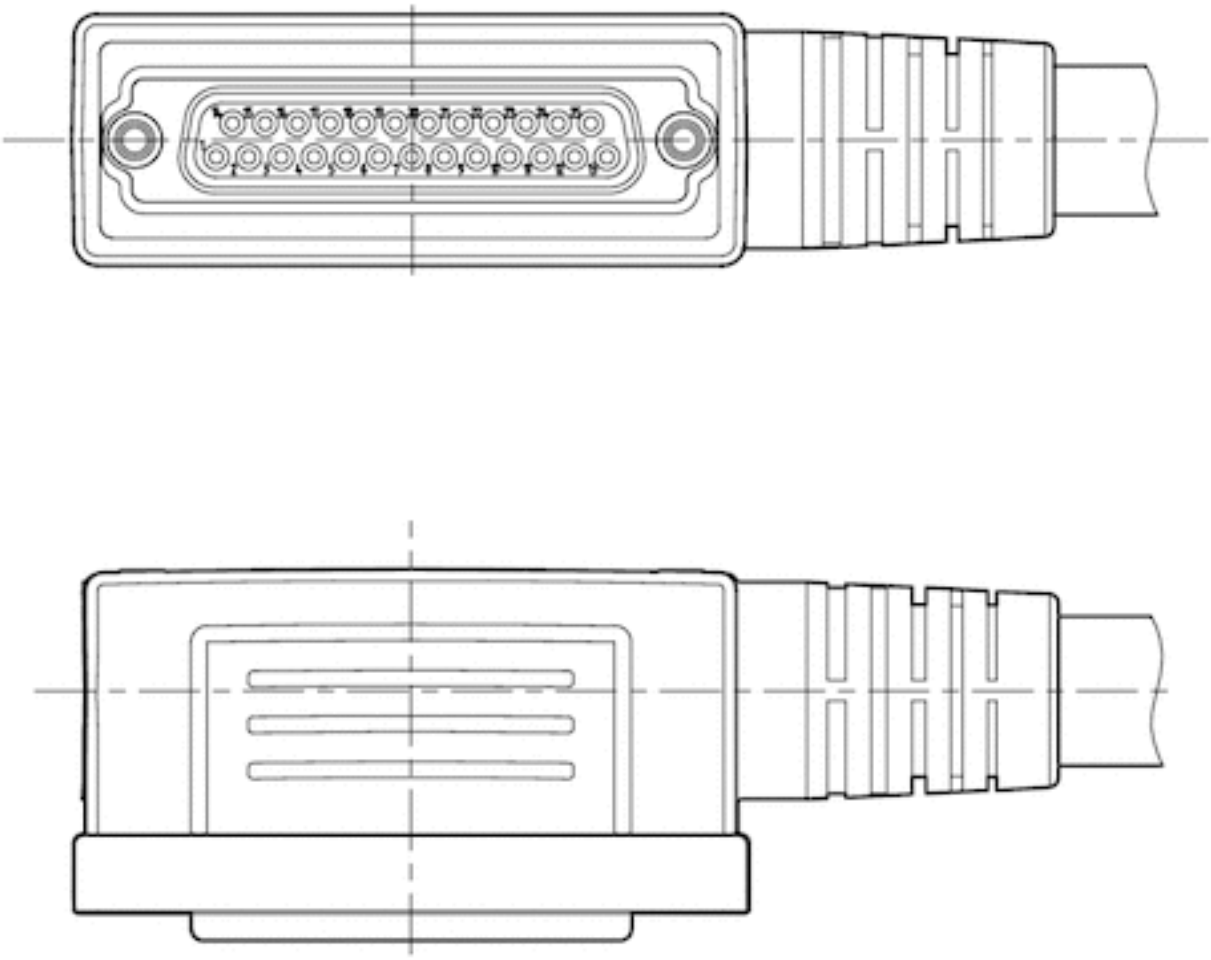

Pin assignments

PIN assignment and cable colors, cable identification as per DIN 47100

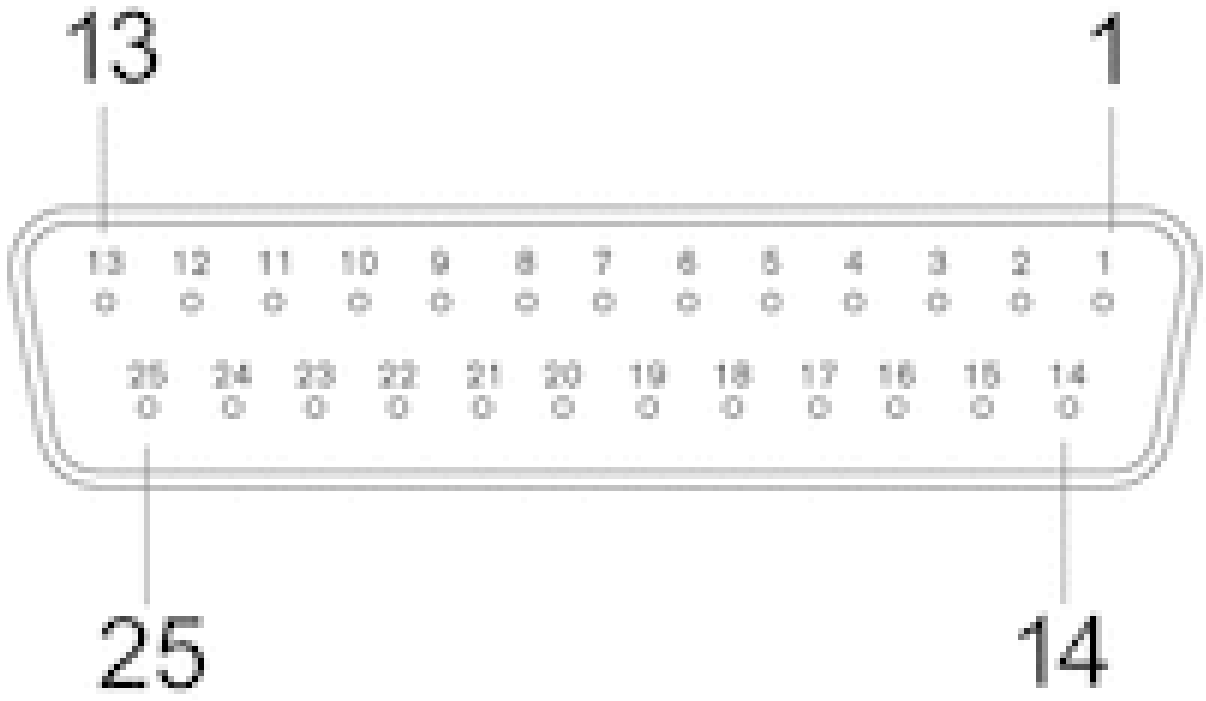

Socket

Pin	1	2	3	4	5	6	7	8	9
Color	white	brown	green	yellow	gray	pink	blue	red	black

10	11	12	13	14	15
violet	gray/pink	red/blue	white/green	brown/green	white/yellow

16	17	18	19	20	21
yellow/brown	white/gray	gray/brown	white/pink	pink/brown	white/blue

22	23	24	25
brown/blue	white/red	brown/red	white/black

Distributor, Series AES

- 4x passive distributor, M12x1, 8-pin / 4x M8x1, 3-pin
- Plug (male), M12x1, 8-pin

Ambient temperature min./max.	-22 ... 176 °F
Operational voltage electronics	24 V DC
Power consumption electronics	2 A
Protection class	IP67
Weight	0.154 lbs

Technical data

Part No.	Type	Port	Port
		1	2
R402001810	16DI4M12 16DI8M8	Plug (male), M12x1, 8-pin	Socket (female), M8x1, 3-pin

Technical information

Material	
Housing	Polyamide

Dimensions

Dimensions

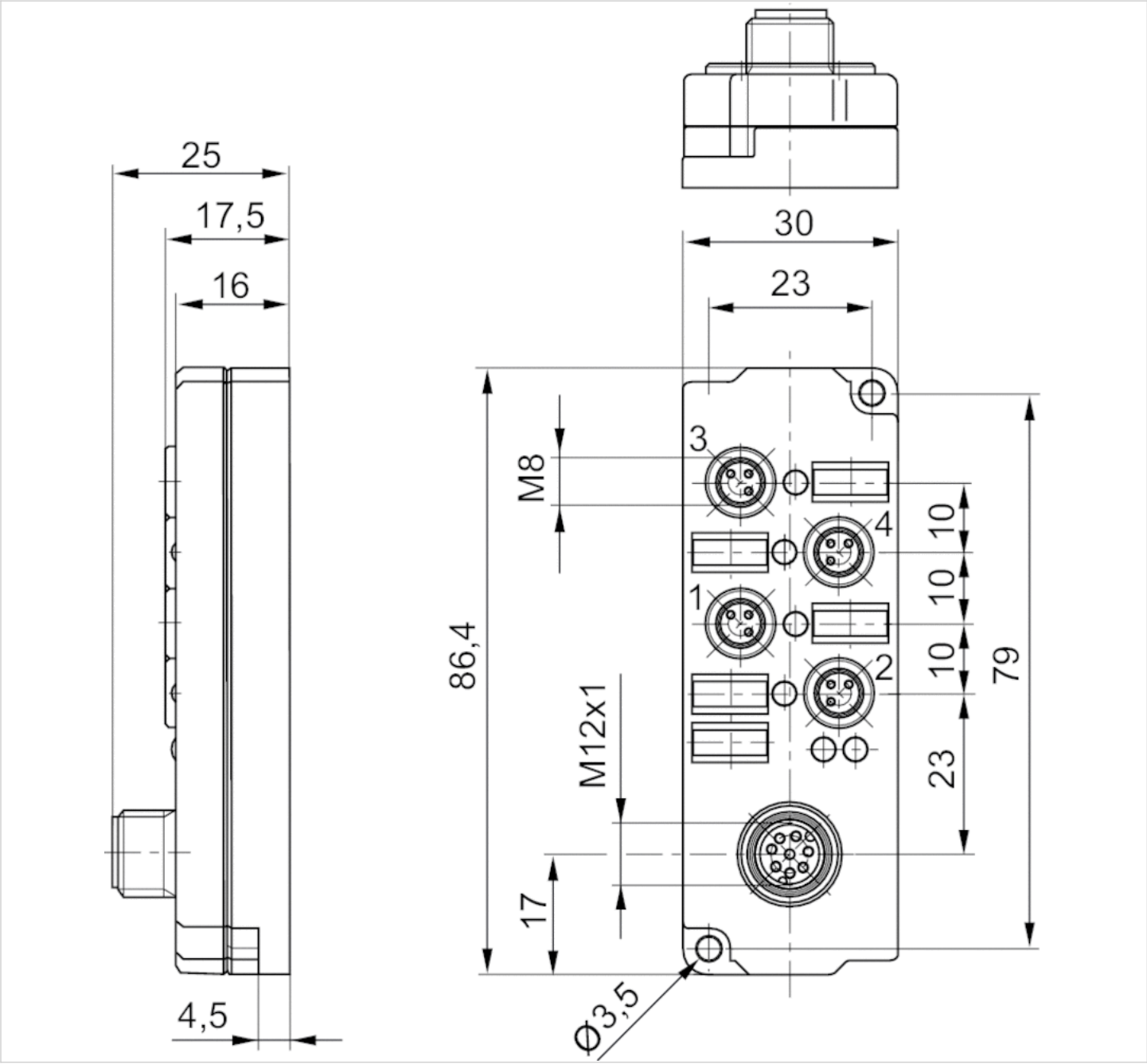

Plug box

Weight	0.264 lbs

Technical data

Part No.	Type
1827030206	Plug box, 25-pin, complete
R412013379	HD multipole plug box, 44-pin, complete

Further accessories:, For valve plug connectors, contact bridges, plugs and cables, etc., see the Chapter “Electrical connection technologies”., For connectors, plastic tubing, etc., see the Chapter "Pneumatic connection technologies"., Fieldbus connections can be found in the correspondent chapter.

Mounting for DIN rail

- For bus coupler

Weight	0.115 lbs

Technical data

Part No.	Type
1827010709	Mounting kit for hat rail DIN EN 60715, 35x15

Scope of delivery: (1) 2 clamp mountings, (2) 2 screws M6x65, (3) 1 screw M6x8

Dimensions

Dimensions

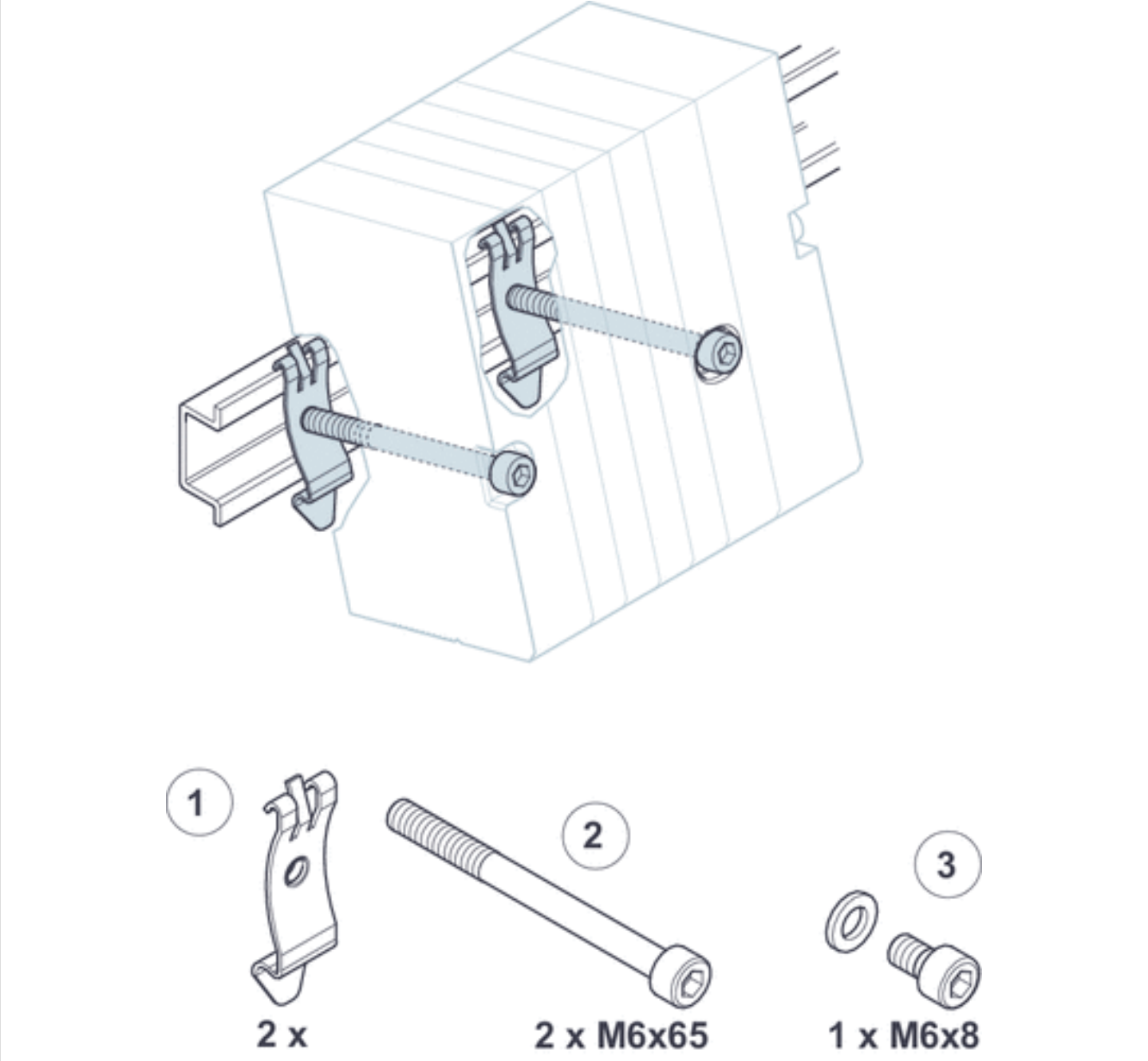

Scope of delivery: (1) 2 clamp mountings, (2) 2 screws M6x65, (3) 1 screw M6x8

Efficient pneumatic solutions, our program: cylinders and drives, valves and valve systems, air supply management

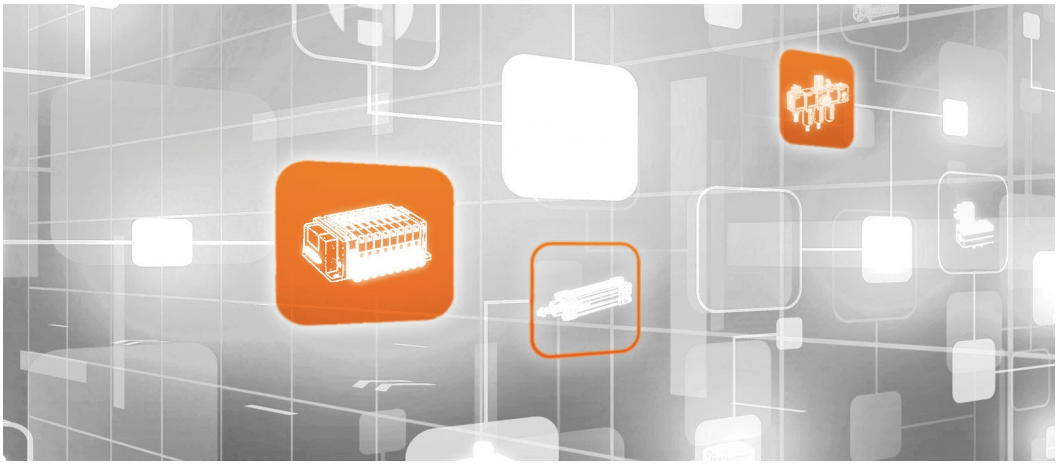

Visit us: Emerson.com/Aventics

Your local contact: Emerson.com/contactus

Emerson.com

Facebook.com/EmersonAutomationSolutions

LinkedIn.com/company/Emerson-Automation-Solutions

Twitter.com/EMR_Automation

An example configuration is depicted on the title page. The delivered product may thus vary from that in the illustration. Subject to change. This Document, as well as the data, specifications and other information set forth in it, are the exclusive property of AVENTICS GmbH. It may not be reproduced or given to third parties without its consent. Only use the AVENTICS products shown in industrial applications. Read the product documentation completely and carefully before using the product. Observe the applicable regulations and laws of the respective country. When integrating the product into applications, note the system manufacturer's specifications for safe use of the product. The data specified only serve to describe the product. No statements concerning a certain condition or suitability for a certain application can be derived from our information. The information given does not release the user from the obligation of own judgement and verification. It must be remembered that the products are subject to a natural process of wear and aging.

The Emerson logo is a trademark and service mark of Emerson Electric Co. Brand logotype are registered trademarks of one of the Emerson family of companies. All other marks are the property of their respective owners. © 2020 Emerson Electric Co. All rights reserved.
2020-12

EMERSON

CONSIDER IT SOLVED™