AVENTICS™ PROPORTIONAL VALVE SENTRONIC*PLUS* IPC

DIGITAL ELECTRONIC PRESSURE REGULATOR, IO-LINK CLASS A

- SENTRONIC*PLUS* IPC is a highly dynamic 2/2-way proportional valve with digital control.
- IO - Link CLASS A Version
- RoHS, REACH compliant
- The very low friction mechanic delivers precise control behaviour, especially in flowing conditions.

General Valve Information	
Fluids	Air or neutral gases, Class 5 according to ISO 8573-1:2010 [7:4:4]
Ports	G 1/8 , 1/8 NPT
Max. allowable pressure	Varies by outlet pressure range. See How to Order on next page.
Pressure range	See table below
Fluid temperature	0...50 C° (32...122°F)
Ambient temperature	0...50 C° (32...122°F)
Setpoint	Digital setpoint in steps of 1 mbar 0-10000 = 0-10 bar
Hysteresis	0.5 % of span
Linearity / pressure measurement	± 0.5 % of span
Repeatability	± 0,5 % of span

Construction	
Body	Aluminium
Internal parts	Stainless steel and aluminium
Seals	FPM

IO-Link	
Protocol version	Specification V1.1
Baud rate	COM3 (230.4 kBaud)
Minimum cycle time	0.5 ms
Process data	2 Byte IN, 2 Byte OUT
Port type	Class A

Electrical Characteristics

Nominal diameter DN	Voltage *	Max. power (W)	Max. current (mA)	Insulation class	Degree of protection	Electrical connection
3	24VDC +/-10%	5	210	F	IP30	5-pin M12 connector (to be ordered separately)

* Max. ripple: 10 %

Specifications

Pipe size	Orifice size	Flow at 6 bar		
		Flow Coefficient		
	(mm)	Kv (m^3/h)	Cv	(l/min)
G/NPT 1/8	3	0.17	0.20	150

01603GB-2019-R01

Availability, design and specifications are subject to change without notice. All rights reserved.

How to Order

CATALOG NUMBER **6 1 4 3 5 7 B A S I D P P**

B: CONTROL PANEL
B = IO-Link with display
C = IO-Link without display

A: VERSION (ports), body
W = 2/2 NC, G1/8
P = 2/2 NC, 1/8 NPT

S: SETPOINT
B = IO-Link Class A

I: FEEDBACK
B = IO-Link Class A

D: OUTPUT
1 = Standard

PP: PRESSURE RANGE

Relative pressure	Max. allowable pressure (bar)	Vacuum (relative)
40 = 0 - 100 mbar	2	V2 = 0 ... -1 bar Bypass version
50 = 0 - 500 mbar	2	
60 = 0 - 1 bar	2	V3 = 0 ... -1 bar Shut-off valve (vacuum at port 1)
02 = 0 - 2 bar	3	
03 = 0 - 3 bar	7	
05 = 0 - 5 bar	7	
06 = 0 - 6 bar	7	

01603GB-2019-R01

Visit our website at emerson.com
Availability, design and specifications are subject to change without notice. All rights reserved.

AVENTICS™ PROPORTIONAL VALVE SENTRONIC*PLUS* IPC

DIGITAL ELECTRONIC PRESSURE REGULATOR, IO-LINK CLASS A

Dimensions: mm (inches)

G/NPT 1/8

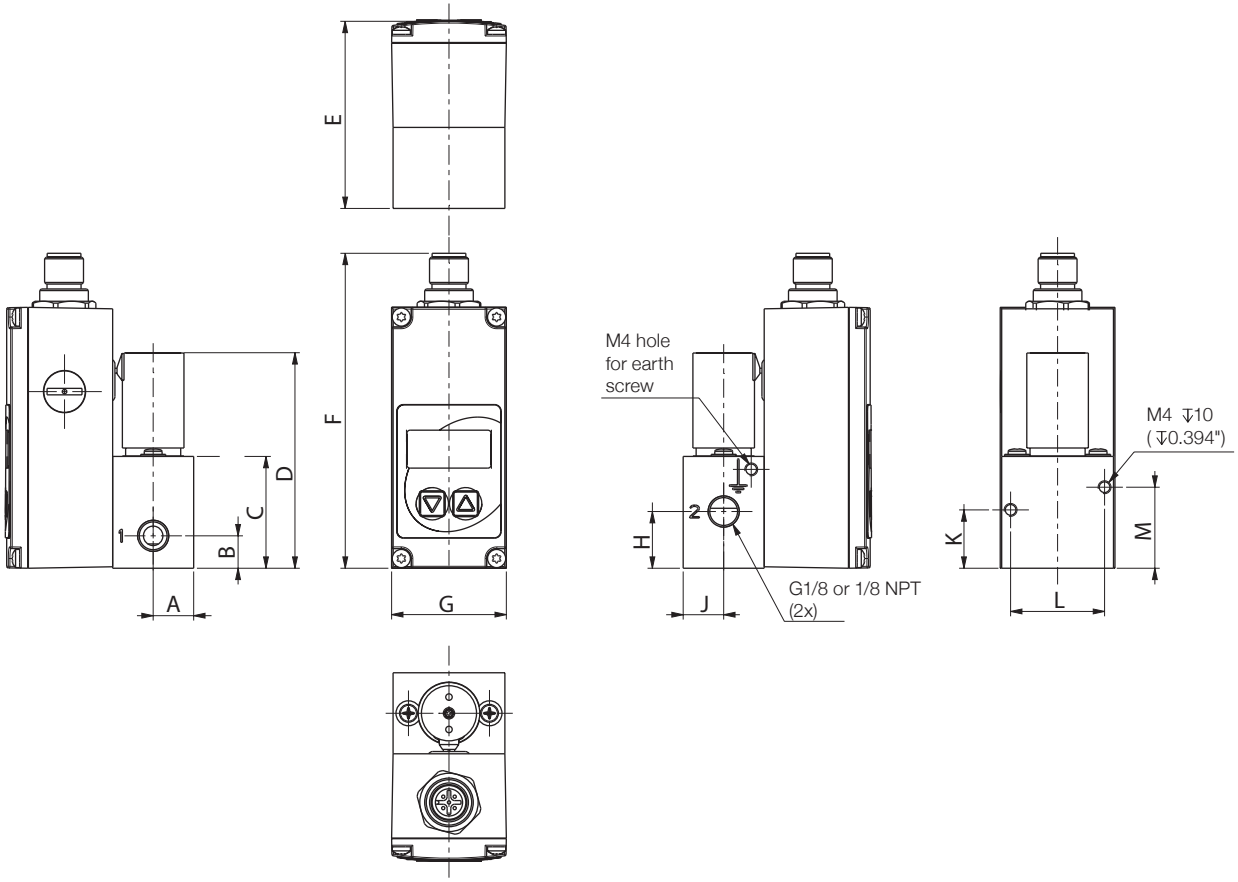

Catalog Number	A	B	C	D	E	F	G	H	J	K	L	M	Weight kg (lbs)
614357XXXXXXX	12.5 (0.492)	10 (0.393)	34.5 (1.358)	66.5 (2.618)	57.7 (2.27)	97 (3.819)	35.4 (1.393)	17.5 (0.689)	12.5 (0.492)	18 (0.708)	29 (1.142)	25 (0.984)	0.250 (0.551)

01603GB-2019-R01

Availability, design and specifications are subject to change without notice. All rights reserved.

Pin Assignment / Cable Assignment

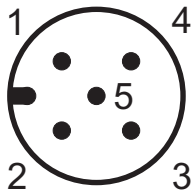

Pin	Description
1	24V voltage supply
2	not connected
3	Supply ground
4	C/Q
5	not connected
Body	EMC shield

ACCESSORIES	
Description	**Catalog Number**
Connection cable 5m, straight socket, open cable end	N15183710000000
Connection cable 10m,straight socket, open cable end	N15183840000000
Connection cable 5m, straight socket on straight connector	N15184490000000
Connection cable 10m, straight socket on straight connector	N15184520000000

01603GB-2019-R01

Visit our website at emerson.com
Availability, design and specifications are subject to change without notice. All rights reserved.